FlarmLED+

Version 1.2

LXNAV d.o.o. • Kidričeva 24, 3000 Celje, Slovenia • tel +386 592 33 400 fax +386 599 33 522
info@lxnav.com • www.lxnav.com

1 Important Notices 3
1.1 Limited Warranty 3
1.1.1 Disposal of Old Electrical & Electronic Equipment 4
1.2 Flarm end user license agreement 4
2 Packing Lists 8
3 Installation 9
4 LXNAV FlarmLED+ Basics 10
4.1 LXNAV FlarmLED+ display at a Glance 10
4.1.1 LXNAV FlarmLED+ display features 10
4.1.2 Interfaces 10
4.1.3 Technical Data 10
5 System Description 11
5.1 Description of FlarmLED+ 11
5.1.1 Status LEDs 12
5.1.2 Horizontal direction LEDs 12
5.1.3 Vertical direction LEDs 12
5.1.4 Distance to the target indicator 12
5.1.5 Touch pad 13
5.1.6 ALS 13
5.2 Powering up FlarmLED+ 13
5.3 Normal operation 13
5.3.1 WARNING Modes: 13
5.3.2 NEAREST Mode: 13
5.3.2.1 Multi target in nearest modus 14
5.3.3 Obstacle warning 14
5.3.4 Alert zone warning 14
5.3.5 Undirected PCAS warning 16
5.3.6 Single target warning 16
5.4 Setting up FlarmLED+ 17
5.5 Other indications 18
5.5.1 IGC-file download (1) 18
5.5.2 Running Flarm firmware update (2) 19
5.5.3 Obstacle database update (3) 19
5.5.4 Diagnostic dump (4) 19
5.5.5 Restore file system (5) 19
5.5.6 Internal consistency check (6) 19
5.5.7 Error codes from flarm 20
5.6 Wiring 22
5.6.1 FlarmLED+ pinout 22
5.6.2 FlarmMouse – FlarmLED+ 23
5.6.3 PowerMouse – FlarmLED+ 23
5.6.4 FlarmBat – FlarmLED+ 23
5.7 Cutout 24
5.7.1.1 Firmware update with Flash Loader 24
6 Revision History 26

1 Important Notices

The LXNAV system is designed for VFR use only as an aid to prudent navigation. All information is presented for reference only. Terrain, airports and airspace data are provided only as an aid to situation awareness.

Information in this document is subject to change without notice. LXNAV reserves the right to change or improve their products and to make changes in the content of this material without obligation to notify any person or organization of such changes or improvements.

A Yellow triangle shows parts of the manual which should be read very carefully and are important for operating the system.

Notes with a red triangle describe procedures which are critical and may result in loss of data or any other critical situation.

A bulb icon shows when a useful hint is provided to the reader.

1.1 Limited Warranty

This LXNAV product is warranted to be free from defects in materials or workmanship for two years from the date of purchase. Within this period, LXNAV will, at its sole discretion, repair or replace any components that fail in normal use. Such repairs or replacement will be made at no charge to the customer for parts and labor, provided that the customer shall be responsible for any transportation cost. This warranty does not cover failures due to abuse, misuse, accident, or unauthorized alterations or repairs. LXNAV Instrument displays damaged by direct or magnified sunlight are not covered under warranty.

THE WARRANTIES AND REMEDIES CONTAINED HEREIN ARE EXCLUSIVE AND IN LIEU OF ALL OTHER WARRANTIES EXPRESSED OR IMPLIED OR STATUTORY, INCLUDING ANY LIABILITY ARISING UNDER ANY WARRANTY OF MERCHANTABILITY OR FITNESS FOR A PARTICULAR PURPOSE, STATUTORY OR OTHERWISE. THIS WARRANTY GIVES YOU SPECIFIC LEGAL RIGHTS, WHICH MAY VARY FROM STATE TO STATE.

IN NO EVENT SHALL LXNAV BE LIABLE FOR ANY INCIDENTAL, SPECIAL, INDIRECT OR CONSEQUENTIAL DAMAGES, WHETHER RESULTING FROM THE USE, MISUSE, OR INABILITY TO USE THIS PRODUCT OR FROM DEFECTS IN THE PRODUCT. Some states do not allow the exclusion of incidental or consequential damages, so the above limitations may not apply to you. LXNAV retains the exclusive right to repair or replace the unit or software, or to offer a full refund of the purchase price, at its sole discretion. SUCH REMEDY SHALL BE YOUR SOLE AND EXCLUSIVE REMEDY FOR ANY BREACH OF WARRANTY.

To obtain warranty service, contact your local LXNAV dealer or contact LXNAV directly.

September 2018 © 2018 LXNAV. All rights reserved.

1.1.1 Disposal of Old Electrical & Electronic Equipment

(Applicable in the European Union and other European countries with separate collection systems)

This symbol on the product or on its packaging indicates that this product shall not be treated as household waste. Instead it shall be handed over to the applicable collection point for the recycling of electrical and electronic equipment. By ensuring this product is disposed of correctly, you will help prevent potential negative consequences for the environment and human health, which could otherwise be caused by inappropriate waste handling of this product. The recycling of materials will be a help to conserve natural resources. For more detailed information about recycling of this product, please contact your local Civic Office, your household waste disposal service, or the shop where you purchased the product.

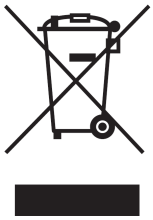

1.2 Flarm end user license agreement

This section contains the End User License Agreement issued by FLARM Technology Ltd, the licensor of FLARM devices.

END USER LICENSE AGREEMENT

By purchasing or using a FLARM device or by downloading, installing, copying, accessing, or using any FLARM Technology Ltd, Cham, Switzerland (hereafter "FLARM Technology") software, firmware, license key, or data, you agree to the following terms and conditions. If you do not agree with the terms and conditions do not purchase or use the FLARM device and do not download, install, copy, access, or use the software, firmware, license key, or data. If you are accepting these terms and conditions on behalf of another person, company, or other legal entity, you represent and warrant that you have full authority to bind that person, company, or legal entity to these terms and conditions.
If you are purchasing or using a FLARM device, the terms "firmware", "license key", and "data" refer to such items installed or available in the FLARM device at time of purchase or use, as applicable.

1. License and Limitation of use

1.1. License. Subject to the terms and conditions of this Agreement, FLARM Technology hereby grants to you a non-exclusive, non-transferable right to download, install, copy, access, and use the software, firmware, license key, or data in binary executable form solely for your own personal or internal business operations. You acknowledge that the software, firmware, algorithms, license key, or data and all related information are proprietary to FLARM Technology and its suppliers.

1.2. Limitation of use. Firmware, license keys, and data may only be used as embedded in and for execution on devices manufactured by or under license from FLARM Technology. License keys and data may only be used in the specific devices, by serial number, for which they were sold or intended. Software, firmware, license keys, and data with an expiration date may not be used after the expiration date. Right to download, install, copy, access, or use software, firmware, license key, or data with an expiration date does not imply right to upgrade or extension of the license beyond the expiration date. No other licenses are granted by implication, estoppel or otherwise.

2. Terms of use of FLARM

2.1. Every FLARM installation must be approved by licensed Part-66 certifying staff or the national equivalent. A FLARM installation requires an EASA Minor Change Approval or the national equivalent.

2.2. FLARM must be installed according to the Installation Instructions and the EASA Minor Change Approval, or the national equivalent.

2.3. FLARM cannot warn in all situations. In particular warnings may be incorrect, late, missing, not being issued at all, show other threats than the most dangerous or distract the pilot's attention. FLARM does not issue resolution advisories. FLARM can only warn of aircraft that are equipped with FLARM, SSR transponders (in specific FLARM devices), or of up-to-date obstacles stored in its database. The use of FLARM does not allow a change of flight tactics or pilot behaviour. It is the sole responsibility of the pilot in command to decide upon the use of FLARM.

2.4. FLARM may not be used for navigation, separation, or under IMC.

2.5. FLARM does not work if GPS is inoperative, degraded, or unavailable for any reason.

2.6. The most recent Operating Manual must be read, understood and followed at all times.

2.7. The firmware must be replaced once per year (every 12 months). The firmware must also be replaced earlier if a Service Bulletin or other information is published with such instruction. Failure to replace the firmware may render the device inoperable or incompatible with other devices, with or without warning or notice thereof.

2.8. Service Bulletins are published as a Newsletter by FLARM Technology. You are required to sign up for the Newsletter on www.flarm.com to ensure that you are informed of published Service Bulletins. If you are entering into this agreement in a form where your email address is available (e.g. online shop) you may be automatically signed up for the Newsletter.

2.9. After power-up, FLARM performs a self-test which must be monitored by the pilots. If a malfunction or defect is observed or suspected, FLARM must be disconnected from the aircraft by maintenance before the next flight and the device inspected and repaired, as applicable.

2.10. The pilot in command is solely responsible to operate FLARM according to applicable national regulations. Regulations might include, but are not limited to, airborne usage of radio frequencies, aircraft installation, safety regulations, or regulations for sports competitions.

3. Intellectual Property. No part of the software, firmware, license keys, data (including obstacle databases), the FLARM radio protocol and messages, and the FLARM hardware and design may be copied, altered, reverse engineered, decompiled or disassembled without an explicit and written approval by FLARM Technology. Software, firmware, license keys, data (including obstacle databases), the FLARM radio protocol and messages, the FLARM hardware and design, and the FLARM logos and name are protected by copyright, trademark and patent laws.

4. Manipulation. It is forbidden to intentionally feed artificially generated signals to the FLARM device, its GPS antenna or the external/internal GPS antenna connections, unless agreed with FLARM Technology in writing for limited R&D activities.

5. FLARM Data and Privacy

5.1. FLARM devices receive, collect, store, use, send, and broadcast data to enable the system to work, improve the system, and to enable troubleshooting. This data may include, but is not limited to, configuration items, aircraft identification, own positions, and such data of other aircraft. FLARM Technology may receive, collect, store, and use this data for said or other purposes including Search and Rescue (SAR).

5.2. FLARM Technology may share data with its partners for aforementioned or other purposes. FLARM Technology may in addition publicly make available data from a FLARM device (Flight Tracking). If a FLARM device has been configured to limit tracking, SAR and other services may not be available.

5.3. Data sent or broadcast by FLARM devices may only be used at own risk and under the same conditions as the FLARM device itself, and is encrypted partially to ensure message integrity, system safety and provide protection for the relevant content against eavesdropping, namely by article 3 of the Budapest Convention on Cybercrime as signed and ratified by most countries respectively its national implementations. FLARM Technology is not responsible for any third party device, software, or service receiving, collecting, storing, using, sending, broadcasting, or making publicly available data regardless of whether legally or illegally.

6. Warranty, Limitation of Liability, and Indemnification

6.1. Warranty. FLARM devices, software, firmware, license keys, and data are provided on an "as is" basis without warranty of any kind — either expressed or implied — including, without limitation, any implied warranties of merchantability or fitness for a particular purpose. FLARM Technology does not warrant the performance of the device, software, firmware, license key, or data or that the device, software, firmware, license key, or data will meet your requirements or operate error free.

6.2. Limitation of Liability. In no event shall FLARM Technology be liable to you or any party related to you for any indirect, incidental, consequential, special, exemplary, or punitive damages (including, without limitation, damages for loss of business profits, business interruption, loss of business information, loss of data or other such pecuniary loss), whether under a theory of contract, warranty, tort (including negligence), products liability, or otherwise, even if FLARM Technology has been advised of the possibility of such damages. In no event will FLARM Technology's total aggregate and cumulative liability to you for any and all claims of any kind arising hereunder exceed the amount of fees actually paid by you for the device, license keys or data giving rise to the claim in the twelve months preceding the claim. The foregoing limitations will apply even if the above stated remedy fails of its essential purpose.

6.3. Indemnification. You will, at your own expense, indemnify and hold FLARM Technology, and all officers, directors, and employees thereof, harmless from and against any and all claims, actions, liabilities, losses, damages, judgments, grants, costs, and expenses, including reasonable attorneys' fees (collectively, "Claims"), arising out of any use of a FLARM device, software, firmware, license key, or data by you, any party related to you, or any party acting upon your authorization.

7. General terms

7.1. Governing Law. This Agreement shall be governed by and construed in accordance with the internal law of Switzerland (to the exclusion of Swiss Private International Law and of international treaties, in particular the Vienna Convention on the International Sale of Goods dated April 11, 1980).

7.2. Severability. If any term or provision of this Agreement is declared void or unenforceable in a particular situation, by any judicial or administrative authority, this declaration shall not affect the validity or enforceability of the remaining terms and provisions hereof or the validity or enforceability of the offending term or provision in any other situation. To the extent possible the provision will be interpreted and enforced to the greatest extent legally permissible in order to effectuate the original intent, and if no such interpretation or enforcement is legally permissible, shall be deemed severed from the Agreement.

7.3. No Waiver. The failure of either party to enforce any rights granted hereunder or to take action against the other party in the event of any breach hereunder shall not be deemed a waiver by that party as to subsequent enforcement of rights or subsequent actions in the event of future breaches.

7.4. Amendments. FLARM Technology reserves the right, in its sole discretion, to amend this Agreement from time to time by posting an updated version of the Agreement on www.flarm.com, provided that disputes arising hereunder will be resolved in accordance with the terms of the Agreement in effect at the time the dispute arose. We encourage you to review the published Agreement from time to time to make yourself aware of changes. Material changes to these terms will be effective upon the earlier of (i) your first use of the FLARM device, software, firmware, license key, or data with actual knowledge of such change, or (ii) 30 days from publishing the amended Agreement on www.flarm.com. If there is a conflict between this Agreement and the most current version of this Agreement, posted at www.flarm.com, the most current version will prevail. Your use of the FLARM device, software, firmware, license key, or data after the amended Agreement becomes effective constitutes your acceptance of the amended Agreement. If you do not accept amendments made to this Agreement, then it is your responsibility to stop using the FLARM device, software, firmware, license key, and data.

7.5. Governing Language. Any translation of this Agreement is done for local requirements and in the event of a dispute between the English and any non-English versions, the English version of this Agreement shall govern. ·

2 Packing Lists

- FlarmLED+
- Cable

3 Installation

The installation of FlarmLED+ is part of the Minor Change covering the installation of the FLARM device and must include an AFM Supplement. The Minor Change for PowerFLARM Core can be acquired here: https://flarm.com/shop/easa-minor-change-approval-mca/

Please refer to chapter 5.6 for detailed wiring instructions.

4 LXNAV FlarmLED+ Basics

4.1 LXNAV FlarmLED+ display at a Glance

FlarmLED+ display is a Flarm® compatible device, able to indicate horizontal and vertical direction of a threat. Nearby traffic is displayed visually and acoustically. It's extremely small size, low power consumption, and has very bright bicolour LED's. It supports FLARM data protocol versions 6 and 7.

FlarmLED+ is certified in category *Standalone*.

4.1.1 LXNAV FlarmLED+ display features

- Extremely bright bicolour LEDs
- Touch pad, to adjust beep volume
- Near mode function
- Automatic baud rate detection
- Low current consumption
- Adjustable or automatic brightness
- Multi target indication
- PCAS indication
- Distance to the nearest target

4.1.2 Interfaces

- Serial RS232 input/output
- Touch pad
- 12 bicolour LEDs for direction
- 5 LEDs for vertical angle
- 3 LEDs for GPS, Rx and Tx indication
- Distance indicator

4.1.3 Technical Data

- Power input 8-32V DC
- Consumption 10mA@12V
- Weight 10g
- Dimensions: 42mm x 25mm x 5mm

5 System Description

5.1 Description of FlarmLED+

It consists of 6 main parts:

- Status LEDs
- Horizontal direction LEDs
- Vertical direction LEDs
- Touch pad
- Beeper
- ALS (Ambient light sensor)

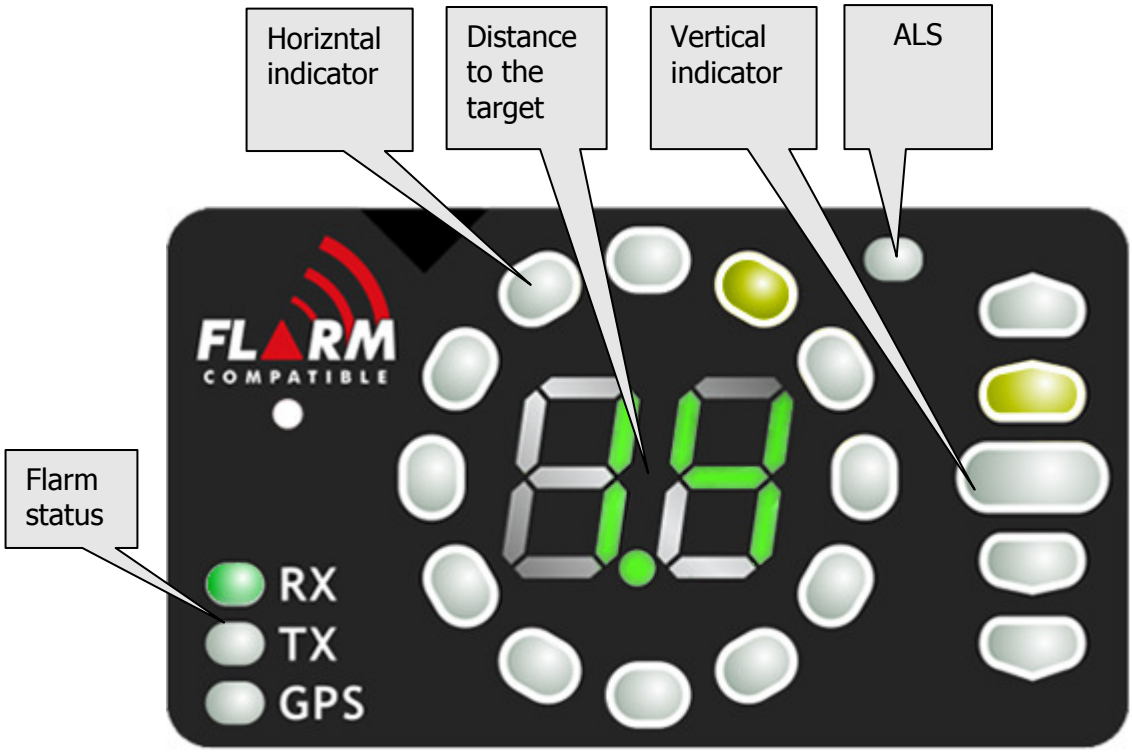

5.1.1 Status LEDs

Status LEDs indicates if connected Flarm device receives any data, transmits data and GPS status.
RX status led indicates that Flarm device is receiving something from other Flarm units.
TX status led indicates that Flarm device is transmitting data.
GPS status led has 3 different modes:

- Fast blinking mode, means, that FlarmLED+ does not receive anything over serial bus (FlarmLED+ automatically detects baudrate of host device, there must be a problem with connection or no data is received)
- Slow blinking means, that GPS status is BAD
- Solid light means, that GPS status is OK.

5.1.2 Horizontal direction LEDs

They are in yellow or red colour.
12 horizontal LEDs are indicating the direction of threat.
Example shows threat from front right side (1 o'clock)

5.1.3 Vertical direction LEDs

They are in yellow colour.
LEDs are describing vertical angle of threat divided by 14°
Example shows that threat is approximately 14° above us, top led threat will be 28° or higher above us.

Resolution of vertical indicator can be set in the setup

5.1.4 Distance to the target indicator

It is in green colour. In normal operation, it shows distance to the target in units, selected in setup menu.

5.1.5 Touch pad

With touching to front side of FlarmLED+, user can adjust volume of beep, turning on/off near mode or adjust initial settings of the display. Initial settings can be configured in setup.

5.1.6 ALS

Is Ambient light sensor. If Brightness is set to automatic, it will be adjusted depending on ambient light sensor. More sun light will be, brighter will be LEDs.

5.2 Powering up FlarmLED+

FlarmLED+ powers up and is ready for operation immediately, after gets power and goes through self-test with indication of firmware version.

5.3 Normal operation

In normal operation with short touch, user can cycle between three different volumes (Low, Medium and High). With long touch (1 second), enables or disables near mode. Switching of mode is also visually supported with moving light around circle. Red moving light means that near mode is disabled, yellow moving light means that near mode is enabled.

5.3.1 WARNING Modes:

WARNING Mode will activate a red blinking diode, if another aircraft equipped with Flarm will be close and a prediction for a **collision** risk is calculated. An audio warning will be also executed. Higher collision risk will increase blinking frequency and audio beep rate. The warnings are classified into three levels (See Flarm manual for details on www.flarm.com)

- First level approximately **18 seconds** before predicted collision
- Second level approximately **13 seconds** before predicted collision
- Third level approximately **8 seconds** before predicted collision

5.3.2 NEAREST Mode:

Will show the direction to the nearest aircraft, which´s position is inside of radio range. **One** yellow LED will light **permanently** and there will **be no audio**. The unit will change over to Warning Mode **automatically, if warning** criteria will be fulfilled and will continue in NEAREST after collision risk will disappear.

Near mode works only when you are moving. On ground, you cannot see nearest target.

Near mode can be enabled or disabled with long touch to the LANAV FlarmLED+, during normal operation. Yellow "flying LED" around horizontal led indicator will indicate Near mode ON, Red "flying LED" around horizontal led indicator will

indicate Near mode OFF.

5.3.2.1 Multi target in nearest modus

If more than one target is in the neighbourhood, the closest target will be displayed with yellow LED permanently. All other targets will blink in yellow colour. Distance and vertical angle will indicate the closest target.

5.3.3 Obstacle warning

An obstacle warning will be activated, if an obstacle is in the front of the aircraft and a collision risk is predicted. The warning is shown with two red LEDs, symmetrical around the 12 o´ clock LED at 10 and 2, they alternate with those at 11 and 1. As we approach to the obstacle the frequency of the alternation increases.

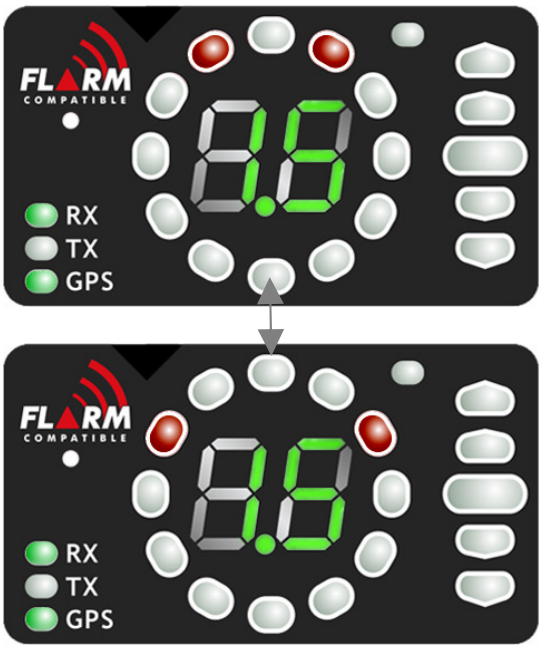

5.3.4 Alert zone warning

An alert zone warning will be activated, if an alert-zone is in the front of the aircraft. The warning is shown with two amber LEDs, symmetrical around the 12 o´ clock LED at 10 and 2, they alternate with those at 11 and 1. As we approach to the alert zone, the frequency of the alternation increases.

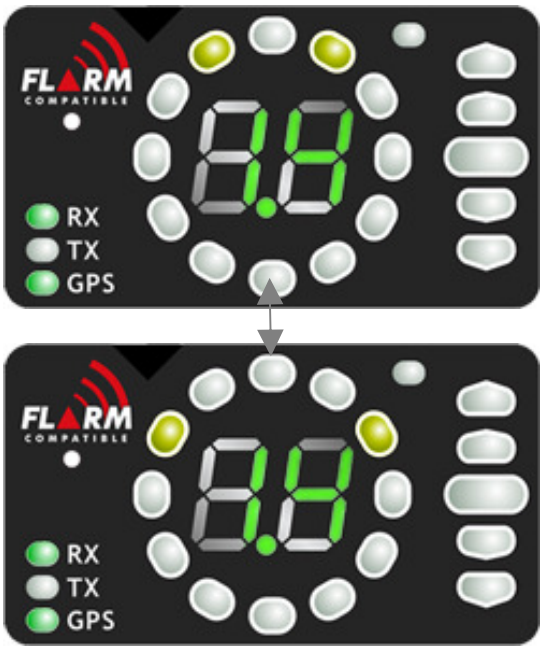
FLARM
COMPATIBLE
RX
TX
GPS
FLARM
COMPATIBLE
RX
TX
GPS

5.3.5 Undirected PCAS warning

If the FlarmLED+ is connected to a device, which also translates transponder signals with ADS-B data into Flarm warnings, you will receive them in the same logic as other FLARM objects. Transponder signals without ADS-B data contain no direction for the thread therefore you will get an undirected warning with the following alternating signals:

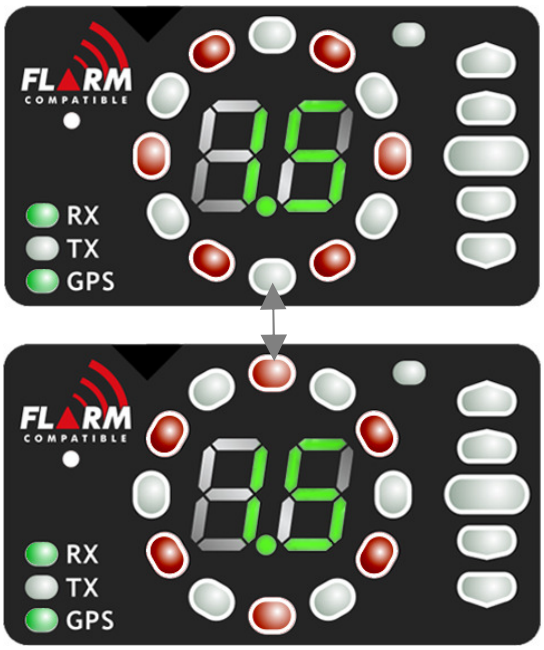

5.3.6 Single target warning

When the other FLARM device is in a collision path then FlarmLED+ is going to show red LED with threat direction along vertical angle and distance to it. For example, next picture indicates threat 11 o'clock, 14 degrees above and 1.4 km away. But last two setting depends on selected units and vertical resolution.

5.4 Setting up FlarmLED+

If we touch LXNAV FlarmLED+ with two fingers for 6 seconds, LXNAV FlarmLED+ will go into setup mode, where following settings can be adjusted:

- Brightness of LED's
- Units setting
- Vertical indicator resolution
- Decimal point
- Near mode
- PCAS setting
- Volume on beeper

Same long touch with two fingers will exit from setup mode.

Setup mode is indicated with following horizontal indicator image:

With long touch (1 second) to the touch pad we are switching between different settings, which can be set.
Short touch will change value for actual setting.

First (left digit) indicates the setting, that we are setting, second digit (right) shows the value of that setting.

On picture below, left digit indicates character "b", right indicates character "A".

Setting	Left digit descrition	Right digit description
Brightness of LED's	b	A.. automatic (ALS) (default) 0.. Minimum brightness 1.. Medium - 2.. Medium + 3.. Maximum brightness
Units setting	U	0.. km (default) 1.. nm 2.. ml
Vertical indicator LED resolution	I	0.. 3° and 7° 1.. 7° and 14° 2.. 14° and 28° (default)
Decimal point	d	0.. automatic (0.0 to 99) 1.. fixed decimal point (0.0 to 9.9)
Near mode	n	0.. OFF (default) 1.. ON one target 2.. ON 2 targets 3.. ON 3 targets 4.. ON 4 targets 5.. ON 5 targets .. 9.. ON 9 targets
PCAS (1)	P	0.. PCAS OFF 1.. PCAS ON
Volume on beeper	S	0.. Minimum volume 1.. Medium 2.. maximum (default)

PCAS information will be available if no flarm warnings present and no closer traffic, which might be sometimes very annoying.

5.5 Other indications

The FlarmLED+ display can indicate some further statuses.
Digits indicate type of the operation. Horizontal indicator indicates progress.

5.5.1 IGC-file download (1)

5.5.2 Running Flarm firmware update (2)

5.5.3 Obstacle database update (3)

5.5.4 Diagnostic dump (4)

5.5.5 Restore file system (5)

5.5.6 Internal consistency check (6)

5.5.7 Error codes from flarm

If any error is present numeric display will blink with an error code.

On picture below is code 81, which means No Obstacles.

In case error code is having more higher then 0xFF, additionally round LED segment will blink, where number of blinking segments indicates highest number. On picture below code 120 is shown.

Error codes are described in the list below.

11 = Firmware expired (requires valid GPS information, i.e. will not be available in the first minute or so after power-on)
12 = Firmware update error
21 = Power (e.g. voltage < 8V)
22 = UI error
23 = Audio error
24 = ADC error
25 = SD card error
26 = USB error
27 = LED error
28 = EEPROM error
29 = General hardware error
2A = Transponder receiver Mode-C/S/ADS-B unserviceable
2B = EEPROM error
2C = GPIO error
31 = GPS communication
32 = Configuration of GPS module
33 = GPS antenna

41 = RF communication
42 = Another FLARM device with the same Radio ID is being received. Alarms are suppressed for the applicable device.
43 = Wrong ICAO 24-bit address or radio ID
51 = Communication
61 = Flash memory
71 = Pressure sensor
81 = Obstacle database (e.g. incorrect file type)
82 = Obstacle database expired.
91 = Flight recorder
93 = Engine-noise recording not possible
A1 = Configuration error, e.g. while reading flarmcfg.txt from SD/USB.
B1 = Invalid obstacle database license (e.g. wrong serial number)
B2 = Invalid IGC feature license
B3 = Invalid AUD feature license
B4 = Invalid ENL feature license
B5 = Invalid RFB feature license
B6 = Invalid TIS feature license
100 = Generic error
101 = Flash File System error
110 = Failure updating firmware of external display
120 = Device is operated outside designated region. The device does not work.
F1 = Other

Vertical indicator shows severity levels:

fatal problem, device will not work	functionality may be reduced	information only, i.e. normal operation	no error, i.e. normal operation

5.6 Wiring

5.6.1 FlarmLED+ pinout

Pin number	Description
1	N.C.
2	(output) Transmit from LXNAV FlarmLED+ RS232 Level
3	(input) Receive to LXNAV FlarmLED+ RS232 Level
4	Ground
5	N.C.
6	12V DC supply (input)

5.6.2 FlarmMouse – FlarmLED+

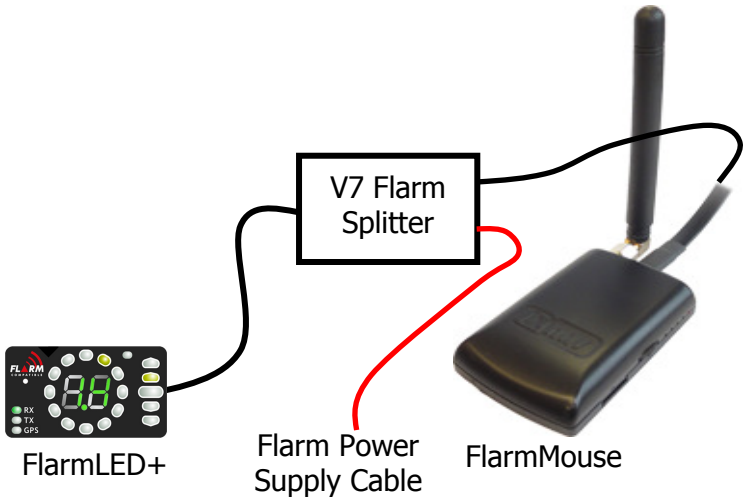

5.6.3 PowerMouse – FlarmLED+

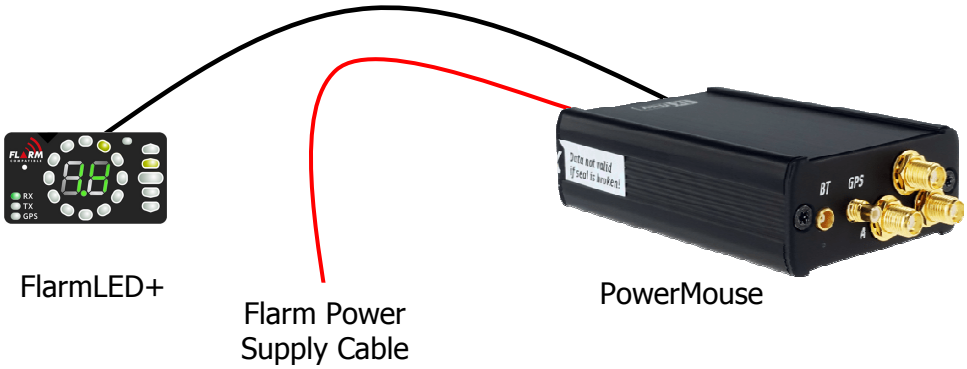

5.6.4 FlarmBat – FlarmLED+

5.7 Cutout

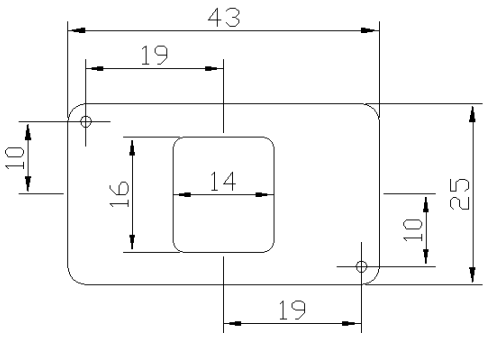

Front view

5.7.1.1 Firmware update with Flash Loader

Firmware can be updated via special flarmLED+ update cable, connected to PC through serial interface.

You can get flash loader at: https://gliding.lxnav.com/lxdownloads/firmware/ (S7 PC update tool)

For the update you need file named _x***.lxfw** (x= version nr.) on your computer.

Update procedure:

- Connect FlarmLED+ cable to PC and power supply
- On Tool select communication port to which your FlarmLED+ is connected to
- Select baudrate 57600
- Select .lxfw file
- Press Flash
- Apply power to FlarmLED+

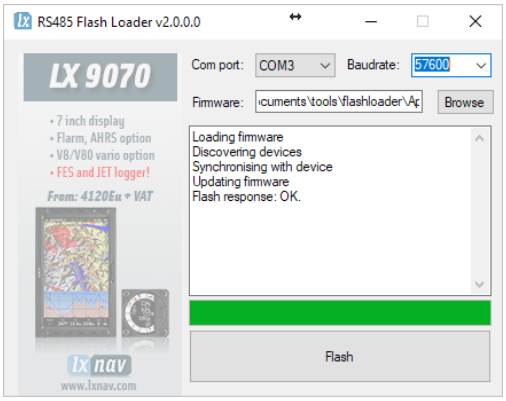

To update FlarmLED+, a FlarmLED update cable with 12V DC and a COM port on PC is required.

6 Revision History

November 2018	Initial release of this manual
November 2018	Reviewed/updated chapters: 4.1,5.2,5.1.2 Added chapters: 5.3.6
November 2018	Added Flarm EULA and installation chapter
December 2018	Flarm EULA and misc typos