INSTALLATION MANUAL

LX90xx
LX80xx

GPS-Navigation System with Variometer

Revision 32

March 2023

www.lxnav.com

1 Important Notices 5
1.1 Limited Warranty 5
2 Introduction 6
3 System Planning 7
3.1 Power Consumption 7
3.2 Power Supply 9
3.3 Dimensions and Weights 10
3.4 Temperature Specifications 11
3.5 Humidity 11
3.6 Location Requirements 12
3.6.1 LX9000 and LX9070 12
3.6.2 LX9050 12
3.6.3 LX8080 13
3.6.4 LX8000 13
3.6.5 LX8040 13
3.6.6 LX8030 13
3.6.7 V5, V9 Vario 13
3.6.8 V8 Vario 13
3.6.9 V80 Vario 13
3.6.10 I9 and I8 Vario Indicators 13
3.6.11 I80 Vario Indicator 13
3.6.12 Flap Sensor 14
3.6.13 Magnetic Compass 14
3.6.14 FlarmLED, FlarmView and FlarmView2 14
3.6.15 FlarmView57 14
3.6.16 Wi-Fi Module 14
3.6.17 Bluetooth Module 14
3.6.18 MOP Sensor (for jet engines) 14
3.6.19 MOP Sensor (for Electric Propulsion Gliders) 14
3.6.20 Bridges and LX DAQ 14
3.7 Cooling Requirements 14
3.8 Mounting Requirements 14
4 Overview of the System 15
4.1 Overview 15
4.2 Communication BUS 15
4.3 Harness and Cables 15
4.4 Splitters 16
4.5 Ethernet Port 16
4.6 Available Cables and Harnesses 16
4.7 Examples of Systems 18
5 Installation and Configuration 21
5.1 Main Unit and Repeater Unit 21
5.1.1 Installation of Options 21
5.1.2 Cut-Outs 22
5.1.2.1 LX9000 Cut-Out 22
5.1.2.2 LX9070 Cut-Out 23
5.1.2.3 LX9050 Cut-Out 23
5.1.2.4 LX8080 Cut-Out 24
5.1.2.5 LX8000 Cut-Out 24
5.1.2.6 LX8040 Cut-Out 25
5.1.2.7 LX8030 Cut-Out 25
5.1.2.8 LX8040/8030 External SD-card reader Cut-Out 26

5.1.3 Dimensions 27
5.1.3.1 LX9000 GEN3 Dimensions 27
5.1.3.2 LX9000 GEN4 Dimensions 28
5.1.3.3 LX9070 GEN3 Dimensions 29
5.1.3.4 LX9070 GEN4 Dimensions 30
5.1.3.5 LX9050 Dimensions 31
5.1.3.6 LX8080 Dimensions 32
5.1.3.7 LX8000 Dimensions 33
5.1.3.8 LX8040 Dimensions 34
5.1.3.9 LX8030 Dimensions 35
5.1.3.10 V5 & V9 Dimensions 36
5.1.3.11 V8 Dimensions 37
5.1.3.12 V80 Dimensions 38
5.1.3.13 I5 Dimensions 39
5.1.3.14 I8 Dimensions 40
5.1.3.15 I80 Dimensions 41
5.1.4 Ports 42
5.1.4.1 LX9000 42
5.1.4.2 LX9050 42
5.1.4.3 LX9050 Simple 43
5.1.4.4 LX8000 Digital Unit 43
5.1.4.5 LX8000 Digital Unit Version 2 44
5.1.4.6 LX8080 Digital Unit 44
5.1.4.7 LX8080 Digital Unit Version 2 45
5.1.4.8 LX8080 Digital Unit Simple Version 45
5.1.4.9 LX8040 Digital Unit 46
46
5.1.4.10 LX8030 Digital Unit 46
5.1.4.11 USB port 47
5.1.4.12 Flarm Port (for LX800 Versions 1 – no 12V Output) 47
5.1.4.13 Flarm Port on LX9xxx 47
5.1.4.14 PDA Port (RJ45) 48
5.1.4.15 GPS Ports (RJ12) only on Simple Version 49
5.1.4.16 Colibri Port 49
5.1.4.17 PC Port 49
5.2 Connection and Functionality Check of All Peripheral Units 50
5.2.1 Vario Unit 50
5.2.1.1 Connecting the Vario Unit 50
5.2.1.2 Cut-Outs 50
5.2.1.1 Wiring 51
5.2.1.2 Connection to the Bus 54
5.2.1.3 Pneumatics 54
5.2.1.4 Audio 55
5.2.1.5 Inputs 55
5.2.2 Installation of Options 56
5.2.2.1 Remote Sticks 56
5.2.2.2 Flarm 59
5.2.2.3 External Flarm or Power Flarm (PowerMouse) 59
5.2.2.4 ADSB Receiver 60
5.2.2.5 NANO/NANO3 64
5.2.2.6 NANO4 65
5.2.2.7 Sxx vario connection to LXxxxx 66

5.2.2.8 Additional Indicators 67
5.2.2.9 Flap Sensor 67
5.2.2.10 LX DAQ 67
5.2.2.11 485 to 232 Bridge 68
5.2.2.12 Wi-Fi Module 69
5.2.2.13 Compass Module 69
5.2.2.14 AHRS (Attitude and Heading Reference System) 69
5.2.2.15 FES Bridge 70
5.2.2.16 JDU Bridge 70
5.2.2.17 FlarmLED Display 70
5.2.2.18 FlarmView and FlarmView2 Display 72
5.2.2.19 FlarmView57 Display 73
5.2.2.20 Flarm ACL 74
5.2.2.21 Bluetooth Module 79
5.2.3 LXNAV Connect set-up 79
5.2.3.1 Activating Wi-Fi module 79
5.2.3.2 Creating account 79
5.2.3.3 Pair profile to the device 80
6 Firmware Update 80
7 Troubleshooting 81
7.1 Export Diagnostic Files 81
8 Revision History 82

1 Important Notices

The LXNAV system is designed for VFR use only as an aid to prudent navigation. All information is presented for reference only. Terrain, airports and airspace data are provided only as an aid to situation awareness.

Information in this document is subject to change without notice. LXNAV reserves the right to change or improve their products and to make changes in the content of this material without obligation to notify any person or organisation of such changes or improvements.

A Yellow triangle is shown for parts of the manual which should be read very carefully and are important for operating the system.

Notes with a red triangle describe procedures which are critical and may result in loss of data or any other critical situation.

A bulb icon is shown when a useful hint is provided to the reader.

1.1 Limited Warranty

This LXNAV product is warranted to be free from defects in materials or workmanship for two years from the date of purchase. Within this period, LXNAV will, at its sole discretion, repair or replace any components that fail in normal use. Such repairs or replacement will be made at no charge to the customer for parts and labour, provided that the customer shall be responsible for any transportation cost. This warranty does not cover failures due to abuse, misuse, accident, or unauthorised alterations or repairs.

THE WARRANTIES AND REMEDIES CONTAINED HEREIN ARE EXCLUSIVE AND IN LIEU OF ALL OTHER WARRANTIES EXPRESSED OR IMPLIED OR STATUTORY, INCLUDING ANY LIABILITY ARISING UNDER ANY WARRANTY OF MERCHANTABILITY OR FITNESS FOR A PARTICULAR PURPOSE, STATUTORY OR OTHERWISE. THIS WARRANTY GIVES YOU SPECIFIC LEGAL RIGHTS, WHICH MAY VARY FROM STATE TO STATE.

IN NO EVENT SHALL LXNAV BE LIABLE FOR ANY INCIDENTAL, SPECIAL, INDIRECT OR CONSEQUENTIAL DAMAGES, WHETHER RESULTING FROM THE USE, MISUSE, OR INABILITY TO USE THIS PRODUCT OR FROM DEFECTS IN THE PRODUCT. Some states do not allow the exclusion of incidental or consequential damages, so the above limitations may not apply to you. LXNAV retains the exclusive right to repair or replace the unit or software, or to offer a full refund of the purchase price, at its sole discretion. SUCH REMEDY SHALL BE YOUR SOLE AND EXCLUSIVE REMEDY FOR ANY BREACH OF WARRANTY.

To obtain warranty service, contact your local LXNAV dealer or contact LXNAV directly.

© 2018 LXNAV. All rights reserved.

2 Introduction

The printed version of this installation manual is in grayscale. Some figures and diagrams are coloured. Please refer to electronic version to see colours. The latest electronic version of this manual can be downloaded from http://www.lxnav.com section downloads-manuals.

This manual will guide you through the installation process of all systems, components, basic setup and check of the system.

Before using any part of the system, please read and understand the installation and user manuals!

There are no serviceable parts within the unit, hence the unit must be taken to the factory for service.

Opening the unit by the user will void warranty and airworthiness.

3 System Planning

In this chapter the installer will be informed how and where particular equipment items can be installed. Some items have environmental and location requirements, others not.

3.1 Power Consumption

Some modules obtain power from the main unit. These modules do not need a circuit breaker as the main unit takes care of this. Other items of equipment that have their own power supply should have specified circuit breakers installed.

	Approximate Current Consumption at 12V DC	**Recommended Circuit Breaker**
LX9000 main unit	500mA (at max. brightness)	3A
LX9000F main unit	520mA (at max. brightness)	3A
LX9000D repeater unit	480mA (at max. brightness)	3A
LX9070 main unit	660mA (at max. brightness)	3A
LX9070F main unit	680mA (at max. brightness)	3A
LX9070D repeater unit	640mA (at max. brightness)	3A
LX9050 main unit	590mA (at max. brightness)	3A
LX9050F main unit	610mA (at max. brightness)	3A
LX9050D repeater unit	570mA (at max. brightness)	3A
LX8080 main unit	250mA (at max. brightness)	3A
LX8080F main unit	270mA (at max. brightness)	3A
LX8080D repeater unit	230mA (at max. brightness)	3A
LX8000 main unit	300mA (at max. brightness)	3A
LX8000F main unit	350mA (at max. brightness)	3A
LX8000D repeater unit	250mA (at max. brightness)	3A
LX8040 main unit	380mA (at max. brightness)	3A
LX8040F main unit	410mA (at max. brightness)	3A
LX8040D repeater unit	370mA (at max. brightness)	3A
LX8030 main unit	380mA (at max. brightness)	3A
LX8030F main unit	410mA (at max. brightness)	3A
LX8030D repeater unit	370mA (at max. brightness)	3A
V5 Vario	150mA (no audio)	-
V9 Vario	130mA (no audio)	-
V80 Vario	180mA (no audio)	-
V8 Vario	150mA (no audio)	-
Vario indicator (57mm I5)	80mA	-
Vario indicator (57mm I8)	110mA	-
Vario indicator (80mm I80)	100mA	-
Remote stick	20mA	-
Flap sensor	30mA	-
Magnetic compass	70mA	-
Radio bridge	20mA	-
Transponder bridge	20mA	-
NMEA bridge	20mA	-
PDA port *	800mA	-
Wi-Fi module	20mA	-
FES bridge	40mA	-
JDU bridge	40mA	-
Flarm LED display	30mA (without beeper)	-
FlarmView display	70mA	-

FlarmView57 display	70mA	-
Flarm ACL	30mA (without current for driving LEDs)	3A
Bluetooth module	10mA	-
MOP sensor	100mA	-
LX DAQ	20mA	

* Not on all types of devices

3.2 Power Supply

	Min. Voltage	Nominal Voltage	Max. Voltage	
LX9000 main unit	10V	12V	16V	26V*
LX9000F main unit	10V	12V	16V	26V*
LX9000D repeater unit	10V	12V	16V	26V*
LX9070 main unit	10V	12V	16V	32V*
LX9070F main unit	10V	12V	16V	32V*
LX9070D repeater unit	10V	12V	16V	32V*
LX9050 main unit	10V	12V	16V	32V*
LX9050F main unit	10V	12V	16V	32V*
LX9050D repeater unit	10V	12V	16V	32V*
LX8080 main unit	10V	12V	16V	32V*
LX8080F main unit	10V	12V	16V	26V*
LX8080D repeater unit	10V	12V	16V	26V*
LX8000 main unit	10V	12V	16V	26V*
LX8000F main unit	10V	12V	16V	26V*
LX8000D repeater unit	10V	12V	16V	26V*
LX8040 main unit	10V	12V	16V	32V*
LX8040F main unit	10V	12V	16V	26V*
LX8040D repeater unit	10V	12V	16V	26V*
LX8030 main unit	10V	12V	16V	26V*
LX8030F main unit	10V	12V	16V	26V*
LX8030D repeater unit	10V	12V	16V	26V*
V5 Vario		12V (from RS485)		
V9 Vario		12V (from RS485)		
V80 Vario		12V (from RS485)		
V8 Vario		12V (from RS485)		
Vario indicator (57mm I5)		12V (from RS485)		
Vario indicator (57mm I8)		12V (from RS485)		
Vario indicator (80mm I80)		12V (from RS485)		
Remote stick		12V (from RS485)		
Flap sensor		12V (from RS485)		
Magnetic compass		12V (from RS485)		
Radio bridge		12V (from RS485)		
Transponder bridge		12V (from RS485)		
NMEA bridge		12V (from RS485)		
Wi-Fi___33 module		5V (from USB)		
FES bridge		12V (from RS485)		
JDU bridge		12V (from RS485)		
Flarm LED display	3.2V	3.3V (from Flarm port)	3.4V	
FlarmView display	9V	12V (from Flarm port)	16V	
FlarmView2 display	9V	12V (from Flarm port)	35V	
FlarmView57 display	9V	12V (from Flarm port)	18V	
Flarm ACL	9V	12V	18V	
Bluetooth module		5V (from PDA)		
MOP sensor		12V		
LX DAQ		12V (from RS485)		

*GEN 4 and higher

3.3 Dimensions and Weights

	Dimensions	Weight
LX9000 main unit	113 x 145 x 38 mm	615 g
LX9000F main unit	113 x 145 x 38 mm	635 g
LX9000D repeater unit	113 x 145 x 38 mm	615 g
LX9070 main unit	113 x 181 x 38 mm	630 g
LX9070F main unit	113 x 181 x 38 mm	650 g
LX9070D repeater unit	113 x 181 x 38 mm	630 g
LX9050 main unit	136 x 83 x 61 mm	515 g
LX9050F main unit	136 x 83 x 61 mm	535 g
LX9050D repeater unit	136 x 83 x 61 mm	515 g
LX8080 main unit	82 x 82 x 60 mm	435 g
LX8080F main unit	82 x 82 x 60 mm	454 g
LX8080D repeater unit	82 x 82 x 60 mm	435 g
LX8000 main unit	98 x 88 x 65 mm	500 g
LX8000F main unit	98 x 88 x 65 mm	520 g
LX8000D repeater unit	98 x 88 x 65 mm	500 g
LX8040 main unit	82 x 82 x 77 mm	440 g
LX8040F main unit	82 x 82 x 77 mm	460 g
LX8040D repeater unit	82 x 82 x 77 mm	440 g
LX8030 main unit	98 x 88 x 77 mm	452 g
LX8030F main unit	98 x 88 x 77 mm	472 g
LX8030D repeater unit	98 x 88 x 77 mm	452 g
V5 Vario	61 x 61 x 92 mm	300 g
V9 Vario	61 x 61 x 92 mm	310 g
V80 Vario	81 x 81 x 130 mm	400 g
V8 Vario	61 x 61 x 92 mm	305 g
Vario indicator (57mm V5)	61 x 61 x 42 mm	200 g
Vario indicator (57mm V8)	61 x 61 x 48 mm	200 g
Vario indicator (80mm V80)	81 x 81 x 44 mm	270 g
Remote stick	Approx. 150 mm	Approx. 290 g
Flap sensor	52 x 23 x 16 mm	Approx. 190 g
Magnetic compass	56 x 40 x 15 mm	Approx. 100 g
Radio bridge	52 x 32 x 16 mm	45 g
Transponder bridge	52 x 32 x 16 mm	45 g
NMEA bridge	52 x 32 x 16 mm	45 g
Wi-Fi module	40 x 20 x 9 mm	16 g
FES bridge	61 x 32 x 16 mm	20 g
JDU bridge	61 x 32 x 16 mm	20 g
Flarm LED display	42 x 25 x 5 mm	10 g
FlarmView display	65 x 42 x 11 mm	27 g
FlarmView57 display	60 x 60 x 26 mm	98 g
FlarmView2 display	65 x 42 x 18 mm	36 g
Flarm ACL	76 x 63 x 26 mm	75 g
Bluetooth module	64 x 18 x 10 mm	8 g
MOP sensor	66 x 50 x 25 mm	71 g
LX DAQ	65 x 65 x 28 mm	96 g

3.4 Temperature Specifications

	Storage Temperature	Operating Temperature
LX9000 main unit	-40°C to +80°C	-30°C to +60°C
LX9000F main unit	-40°C to +80°C	-30°C to +60°C
LX9000D repeater unit	-40°C to +80°C	-30°C to +60°C
LX9070 main unit	-40°C to +80°C	-30°C to +60°C
LX9070F main unit	-40°C to +80°C	-30°C to +60°C
LX9070D repeater unit	-40°C to +80°C	-30°C to +60°C
LX9050 main unit	-40°C to +80°C	-30°C to +60°C
LX9050F main unit	-40°C to +80°C	-30°C to +60°C
LX9050D repeater unit	-40°C to +80°C	-30°C to +60°C
LX8080 main unit	-40°C to +80°C	-30°C to +60°C
LX8080F main unit	-40°C to +80°C	-30°C to +60°C
LX8080D repeater unit	-40°C to +80°C	-30°C to +60°C
LX8000 main unit	-40°C to +80°C	-30°C to +60°C
LX8000F main unit	-40°C to +80°C	-30°C to +60°C
LX8000D repeater unit	-40°C to +80°C	-30°C to +60°C
LX8040 main unit	-40°C to +80°C	-30°C to +60°C
LX8040F main unit	-40°C to +80°C	-30°C to +60°C
LX8040D repeater unit	-40°C to +80°C	-30°C to +60°C
LX8030 main unit	-40°C to +80°C	-30°C to +60°C
LX8030F main unit	-40°C to +80°C	-30°C to +60°C
LX8030D repeater unit	-40°C to +80°C	-30°C to +60°C
V5 Vario	-40°C to +80°C	-20°C to +60°C
V9 Vario	-40°C to +80°C	-20°C to +60°C
V80 Vario	-40°C to +80°C	-20°C to +60°C
V8 Vario	-40°C to +80°C	-20°C to +60°C
Vario indicator (57mm I5)	-40°C to +80°C	-30°C to +60°C
Vario indicator (57mm I8)	-40°C to +80°C	-30°C to +60°C
Vario indicator (80mm I80)	-40°C to +80°C	-30°C to +60°C
Remote stick	-40°C to +80°C	-30°C to +60°C
Flap sensor	-40°C to +80°C	-30°C to +60°C
Magnetic compass	-40°C to +80°C	-20°C to +60°C
Radio bridge	-40°C to +80°C	-30°C to +60°C
Transponder bridge	-40°C to +80°C	-30°C to +60°C
NMEA bridge	-40°C to +80°C	-30°C to +60°C
Wi-Fi module	-40°C to +80°C	-30°C to +60°C
FES bridge	-40°C to +80°C	-30°C to +60°C
JDU bridge	-40°C to +80°C	-30°C to +60°C
Flarm LED display	-40°C to +80°C	-20°C to +60°C
FlarmView display	-40°C to +80°C	-30°C to +60°C
Flarm ACL	-40°C to +80°C	-30°C to +60°C
Bluetooth module	-40°C to +80°C	-30°C to +60°C
LX DAQ	-40°C to +80°C	-30°C to +60°C

3.5 Humidity

	Recommended humidity (RH)
LX9000 main unit	0% to 80%
LX9000F main unit	0% to 80%
LX9000D repeater unit	0% to 80%

LX9070 main unit	0% to 80%
LX9070F main unit	0% to 80%
LX9070D repeater unit	0% to 80%
LX9050 main unit	0% to 80%
LX9050F main unit	0% to 80%
LX9050D repeater unit	0% to 80%
LX8080 main unit	0% to 80%
LX8080F main unit	0% to 80%
LX8080D repeater unit	0% to 80%
LX8000 main unit	0% to 80%
LX8000F main unit	0% to 80%
LX8000D repeater unit	0% to 80%
LX8040 main unit	0% to 80%
LX8040F main unit	0% to 80%
LX8040D repeater unit	0% to 80%
LX8030 main unit	0% to 80%
LX8030F main unit	0% to 80%
LX8030D repeater unit	0% to 80%
V5 Vario	0% to 80%
V9 Vario	0% to 80%
V80 Vario	0% to 80%
V8 Vario	0% to 80%
Vario indicator (57mm I5)	0% to 80%
Vario indicator (57mm I8)	0% to 80%
Vario indicator (80mm I80)	0% to 80%
Remote stick	0% to 80%
Flap sensor	0% to 80%
Magnetic compass	0% to 80%
Radio bridge	0% to 80%
Transponder bridge	0% to 80%
NMEA bridge	0% to 80%
Wi-Fi module	0% to 80%
FES bridge	0% to 80%
JDU bridge	0% to 80%
Flarm LED display	0% to 80%
FlarmView display	0% to 80%
Flarm ACL	0% to 80%
Bluetooth module	0% to 80%
LX DAQ	0% to 80%

3.6 Location Requirements

3.6.1 LX9000 and LX9070

- Requires 35 mm of space behind the panel
- The main unit harness needs additional 45 mm space
- Choose a position so that the display will be viewable.

3.6.2 LX9050

- Requires 65 mm of space behind the panel
- The main unit harness needs additional 45 mm space
- Choose a position so that the display will be viewable.

3.6.3 LX8080

- Requires 60 mm of space behind the panel
- The main unit harness needs additional 45 mm space
- Choose a position so that the display will be viewable.

3.6.4 LX8000

- Requires 65 mm space behind the panel
- The main unit harness needs additional 45 mm space
- Choose a position so that the display will be viewable.

3.6.5 LX8040

- Requires 77 mm of space behind the panel
- The main unit harness needs additional 45 mm space
- Choose a position so that the display will be viewable.

3.6.6 LX8030

- Requires 77 mm space behind the panel
- The main unit harness needs additional 45 mm space
- Choose a position so that the display will be viewable.
-

3.6.7 V5, V9 Vario

- Requires 92 mm space behind the panel
- The V5 and V9 vario unit harness needs additional 45 mm space
- Some space should be taken in account also for the pitot-static tubes connection
- Choose a position so that display will be viewable
- If the instrument panel is not vertical, additional Attitude and Heading Reference System (AHRS - Artificial Horizon) alignment is required (V9).

3.6.8 V8 Vario

- Requires 94 mm space behind the panel
- The V8 vario unit harness needs additional 45 mm space
- Some space should be taken in account also for the pitot-static tubes connection
- Choose a position so that the display will be viewable
- If the instrument panel is not vertical, additional AHRS alignment is required.

3.6.9 V80 Vario

- Requires 130 mm space behind the panel
- The V80 vario unit harness needs additional 45 mm space
- Some space should be taken in account also for the pitot-static tubes connection
- Choose a position so that the display will be viewable
- If the instrument panel is not vertical, additional AHRS alignment is required.

3.6.10 I9 and I8 Vario Indicators

- Requires 43 mm space behind the panel
- The cable connection needs additional 45 mm space
- Some space should be taken in account also for the pitot-static tubes connection
- Choose a position so that the display will be viewable.

3.6.11 I80 Vario Indicator

- Requires 45 mm space behind the panel
- The cable connection needs additional 45 mm space

- Some space should be taken in account also for the pitot-static tubes connection
- Choose a position so that the display will be viewable.

3.6.12 Flap Sensor

- Is connected to the flap rod – please consult with the glider manufacturer about the installation.

3.6.13 Magnetic Compass

- The location should be magnetically benign
- As far as possible from metal parts, power cables
- In case of small magnetic interferences user calibration is possible
- Very important is the orientation of the magnetic compass (compass has marked TOP position and flight direction position).

3.6.14 FlarmLED, FlarmView and FlarmView2

- The Flarm display should be located on a visible place on the panel.
- It requires 15 mm of space behind the panel.
- The cable will require an additional 10 mm of space.

3.6.15 FlarmView57

- FlarmView57 should be located on a visible place on the panel.
- It requires 28 mm of space behind the panel.
- Cable will take an additional 10 mm of space.

3.6.16 Wi-Fi Module

- It is plugged into the USB port of the main unit.
- It will require an additional 62 mm of space behind the panel.

3.6.17 Bluetooth Module

- It is plugged in the PDA port of the main unit (not available at all types).
- It will require an additional 55 mm of space behind the panel.

3.6.18 MOP Sensor (for jet engines)

- It is installed in the engine compartment so it can easily detect engine noise.

3.6.19 MOP Sensor (for Electric Propulsion Gliders)

- It is installed near main power lines that are coming from the batteries and measures the current from the batteries.

3.6.20 Bridges and LX DAQ

Bridges are designed to be installed into any convenient place within the glider. This also applies to LX DAQ

3.7 Cooling Requirements

Currently there are no cooling requirements. If possible, ventilation should pass through the instrument panel to exchange some warm air. That will drop the temperature behind the panel a few degrees.

3.8 Mounting Requirements

Most LXNAV units are fastened with screws.

4 Overview of the System

4.1 Overview

The LXNAV system consists of many different displays, units and sensors which communicate with each other via the LXNAV RS485 bus.

4.2 Communication BUS

Most devices in LXNAV system talk to each other via the RS485 bus. We use standard SUBD-9 pin connectors. Bus signals can be split via RS485 splitters. Additional splitters can be bridged together with RS485 bridge cables.

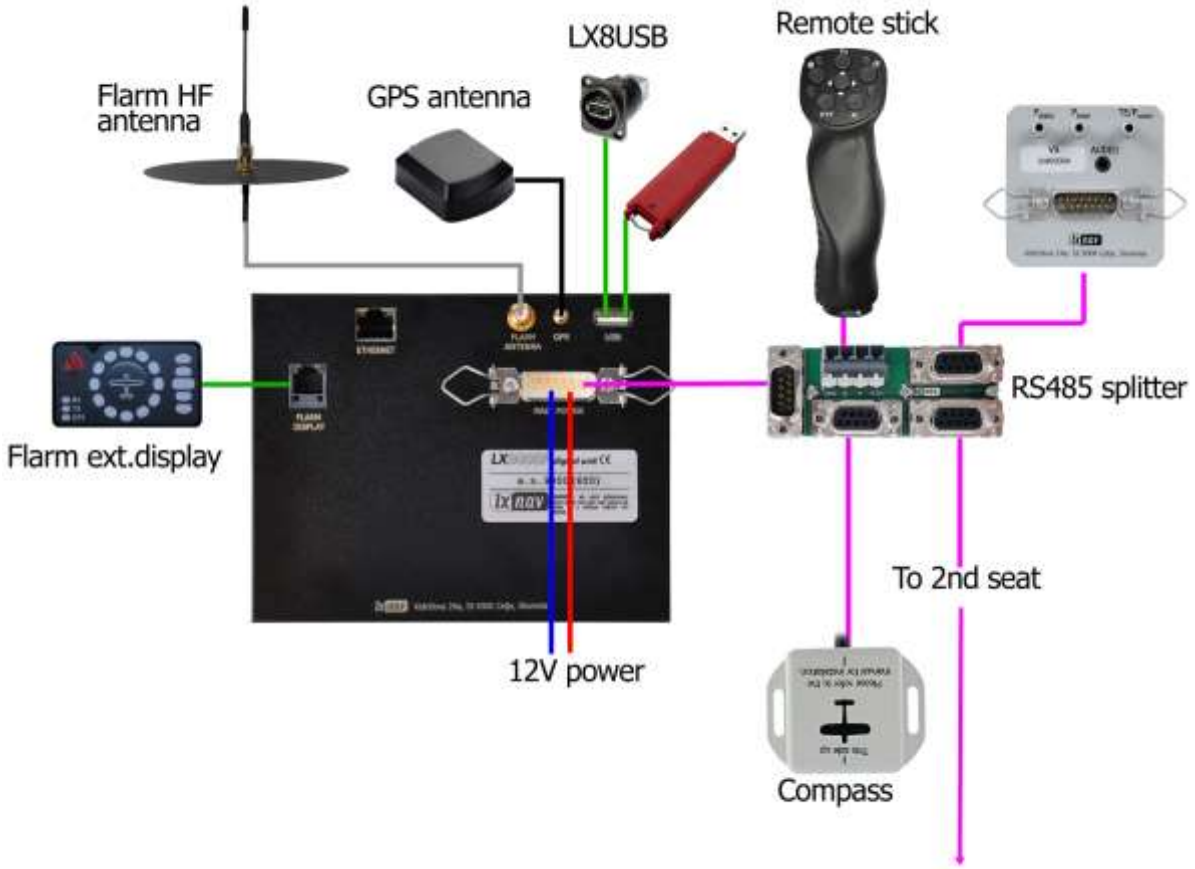

12V power lines can be also white and black cables instead of red and blue. White is positive + 12V DC and black is GND.

Another way of communication with peripheral devices is via the RS232 serial interface. This interface is mostly used to connect 3rd party devices into the LXNAV system (external Flarm, ADSB, radio, transponder, PDA). For each device we have a specially designed cable. The RS232 connection should be done through the main wiring of the LX device on rounded 5pin "binder" connectors.

4.3 Harness and Cables

The main unit cable has two power supply wires (red or white for positive +12V DC and blue or black for ground potential), a RS485 bus cable with a DB9 connector and a serial RS232

cable with a rounded 5 pin connector. This rounded 5 pin connector is designed to be mounted into the panel. It can be used for connection with a PDA device.
The vario harness has also one DB9 RS485 connector which can be directly plugged into the RS485 connector from the main unit. In case we need to connect additional RS485 devices (Remote stick, Flap sensor, Magnetic compass, Radio Bridge,), we need to have a RS485 splitter. If the splitter has not enough sockets we must expand the RS485 bus to another RS485 splitter through a RS485 bridge cable. The RS485 splitter must be ordered with a RS485 bridge cable. The Compass and Flap sensor have DB9 connectors that can be plugged directly into the RS485 splitter.

Flarm displays use standard cables that fit to IGC/Flarm standard RJ12 connectors.

4.4 Splitters

LXNAV systems can use two types of splitters:

- RS485 splitter (second seat, flaps, compass module, Radio Bridge…)

- Flarm splitter (Flarm indicators)

The RS485 splitter is described in detail in the previous sections.
A Flarm splitter is used when we want to connect more than one Flarm display to the Flarm port.

4.5 Ethernet Port

Almost all devices have an Ethernet port which is currently used only for development purposes.

4.6 Available Cables and Harnesses

Cable Part Number	Description
Connection cable NANO power/V7PDA - OUDIE Order Nr.:CC-NP-OUDIE1	Cable for connection between Oudie and PDA port.
Connection cable NANO power/V7PDA - standard RS232 Order Nr.:CC-NP-232	Cable for connection between PDA port and standard RS232 (DB9) connector.
Connection cable NANO power/V7PDA - IPAQ 38xx Order Nr.:CC-NP-38	Cable for connection between PDA and IPAQ with 38xx family connector.
Connection cable NANO power/V7PDA - PNA V2, IPAQ 31x Order Nr.:CC-NP-IPAQ310	Cable for connection between PDA and IPAQ with 310 family connector.

Connection cable NANO power/V7PDA - V7/LX16x/LX16xx Order Nr.:CC-NP-LX	Cable for connection between PDA and LX device with standard RJ12 port.
Connection cable NANO power/V7PDA - Lx7xxx Order Nr.:CC-NP-IGC	Cable for connection between PDA and LX device with standard IGC RJ12 port.
Connection cable NANO power/V7PDA - Butterfly Connect Order Nr.:CC-NP-BFC	Cable for connection between PDA and LX device with butterfly connect.
Cable Digital Unit (for LX90xx/LX80xx) Order Nr.:du-ca	Main unit harness.
Cable Vario Unit (for V5/V9/V80/V8) Order Nr.:vu-ca	Harness for vario units.
Cable Double Seat (for LX90xx/LX80xx) Order Nr.:ds-ca	Harness for repeater units, includes 4m RS485 cable.
Cable USB or USB-D Order Nr.: usb-ca	Harness for old types of vario units.
Cable RS485 extension cable (4m) Order Nr.: 485-4m-ca	Extension cable for connection to the rear repeater unit.
Cable RS485 bridge (30cm) Order Nr.: 485-bridge-ca	RS485 bridge cable to bridge two RS485 splitters.
Cable Instrument panel (5P) – PC Order Nr.: lx5pc-ca	PC communication cable with rounded 5pin connector. Used for RS232 communication between PC and main unit. It can be used also for Flarm firmware update if update via SD card is not successful.
Cable LX8000/8080/9000 (5P) – FLARM (RJ12) Order Nr.: lx5flarm-ca	Serial cable for external Flarm connection between rounded 5pin connector and standard Flarm RJ12 plug, including power supply.
Cable LX8000/8080/9000 (5P) PowerFLARM(RJ45) Order Nr.:lx5PF-ca	Serial cable for external PowerFLARM connection between rounded 5pin connector and standard Flarm RJ45 plug, including power supply.
Cable LX8000/8080/9000 (5P) – PowerFLARM Core (DB9) Order Nr.:lx5pfcore-ca	Serial cable for external PowerFLARM connection between rounded 5pin connector and standard DB9 plug for Power Flarm Core including power supply.
Cable Flarm (RJ12) FlarmView/FlarmLED(RJ12) (cca. 3.5m) Order Nr.:FlarmView3.5m-ca	Standard cable for Flarm displays 3.5m long.
Cable Flarm (RJ12) FlarmView/FlarmLED(RJ12) (cca. 40cm) Order Nr.:FlarmView-ca	Standard cable for Flarm displays 40cm long.
Cable PowerFLARM (RJ45) FlarmView/FlarmLED(RJ12) (cca. 40cm) Order Nr.:FlarmViewPF-ca	Standard cable for Flarm displays 40cm long on one end with RJ45 (PowerFLARM) and the other end with RJ12 (FlarmView).
Cable LX9000 TRX1090 Order Nr.:lx9000-TRX-ca (lx5pf-ca + FlarmView-ca)	This is a cable set to connect ADSB receiver.

4.7 Examples of Systems

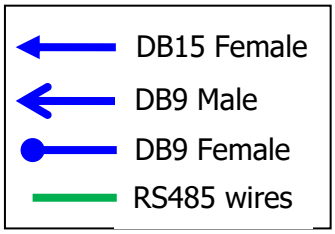

Basic Installation

More Complex Installation

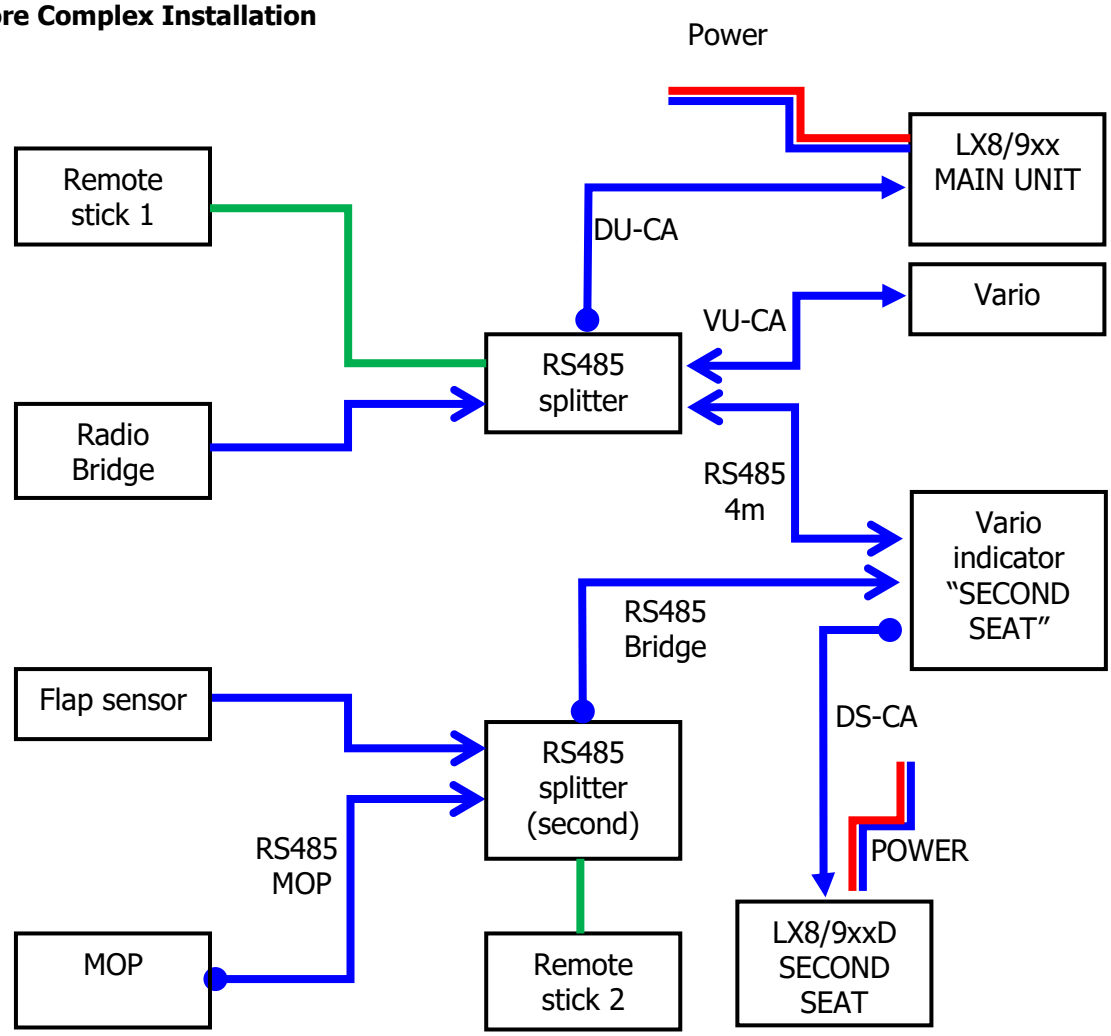

General Connection Options

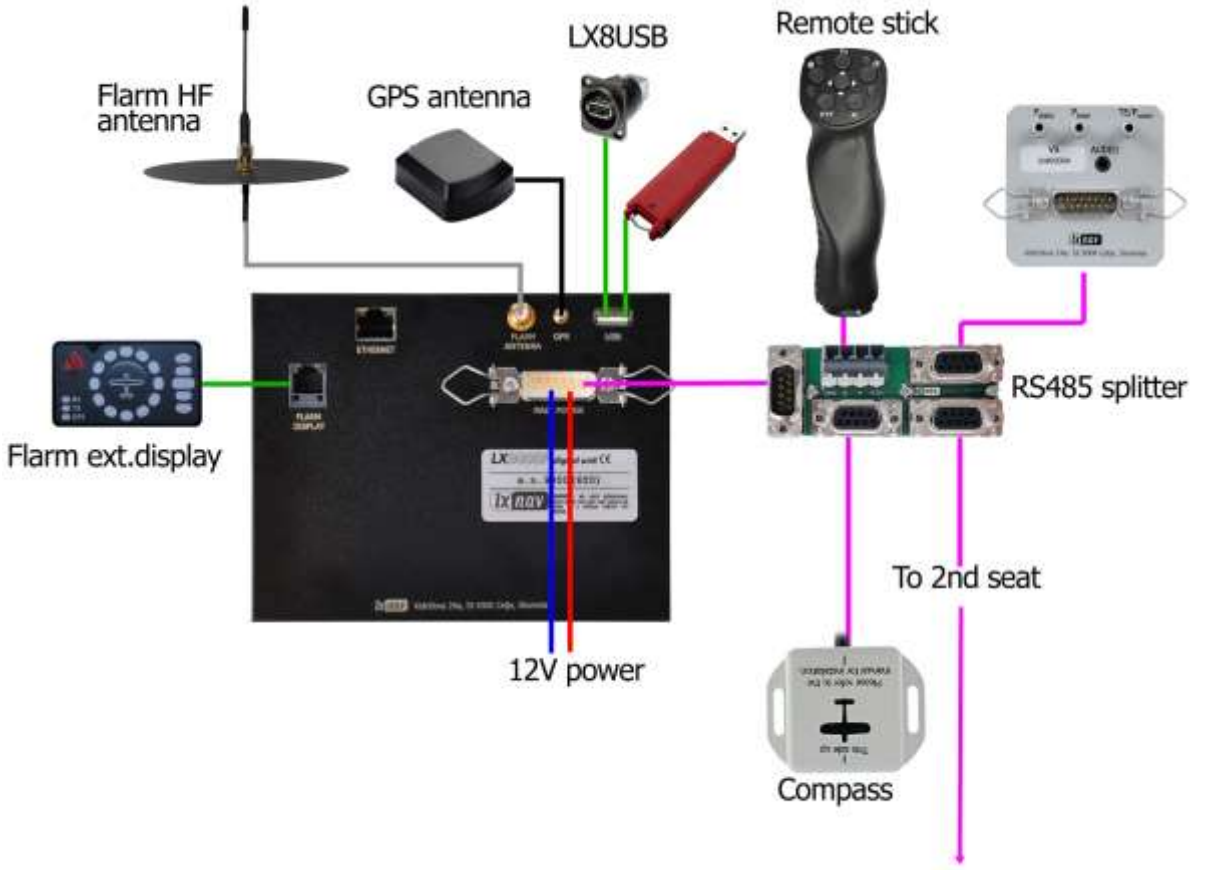

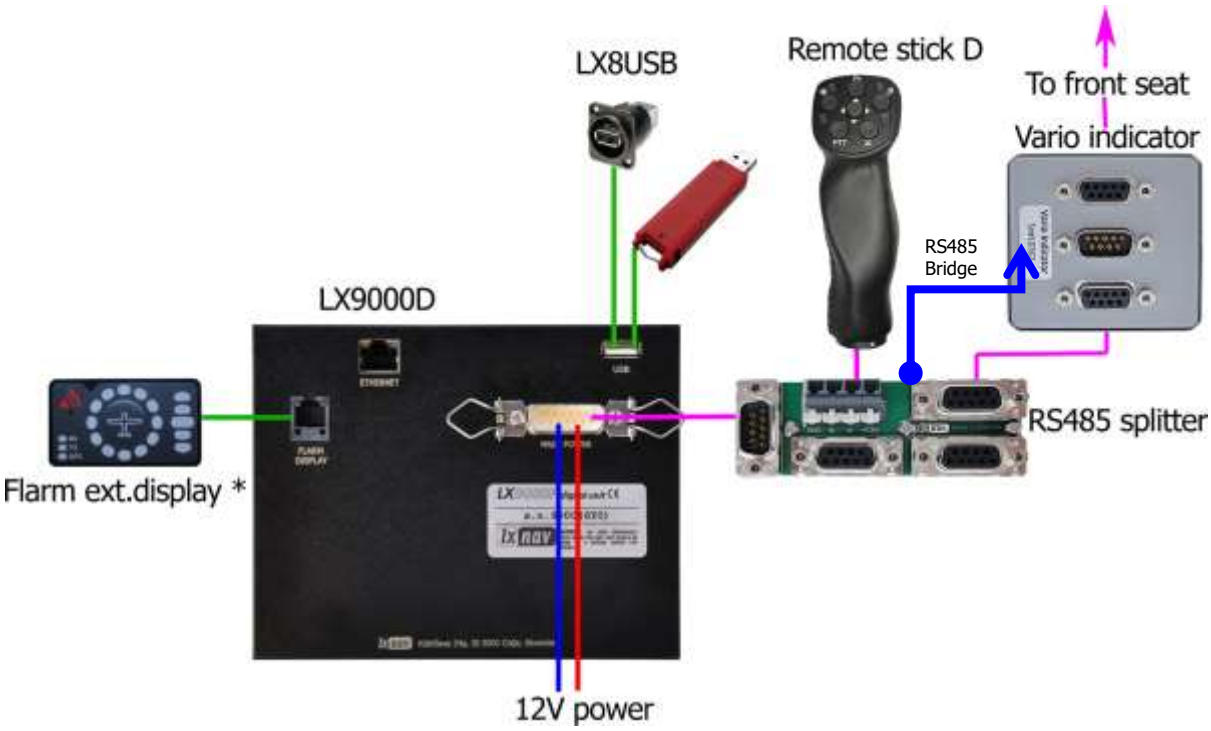

* This function may not work on older types of LX9000D

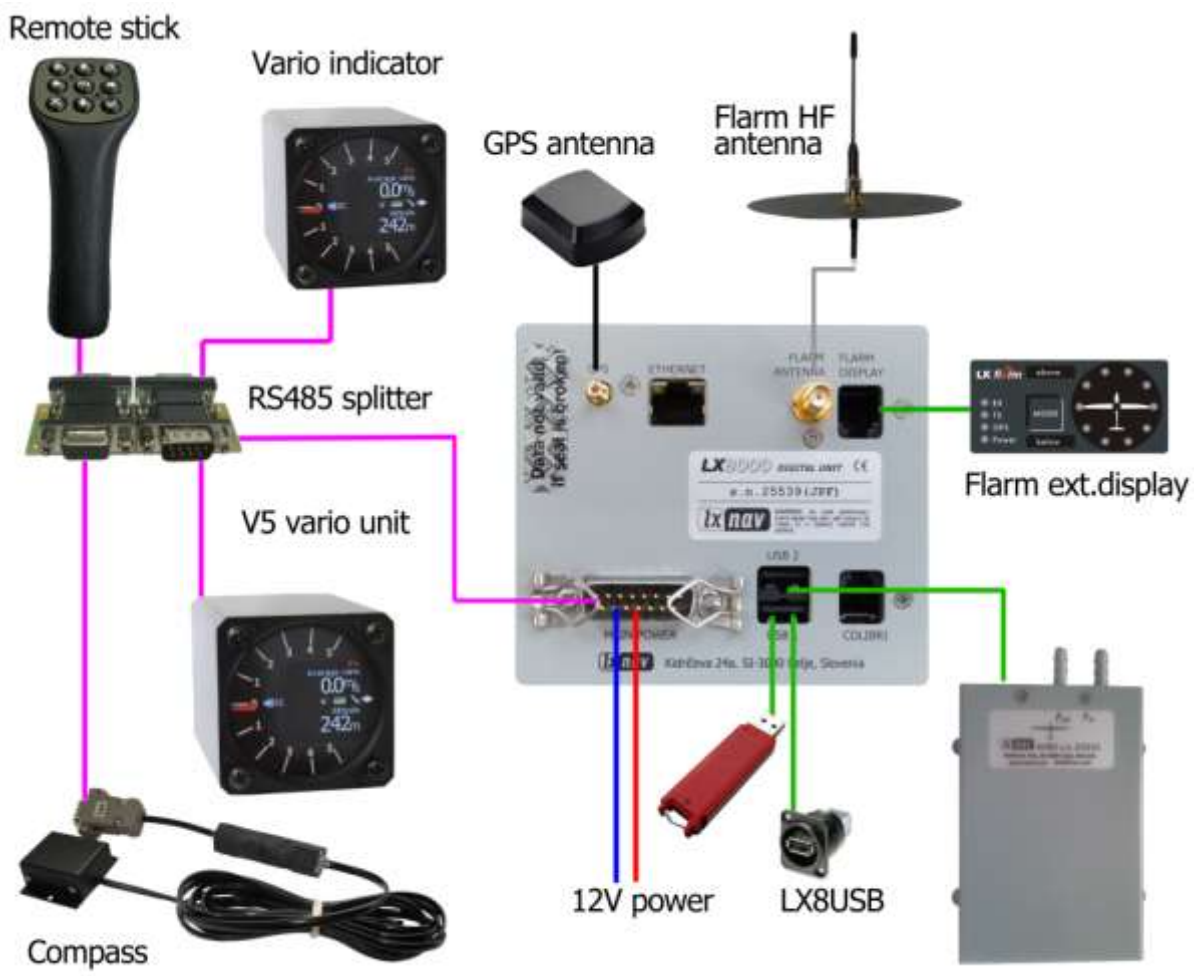

LX80xx/90xx – Flap UNI/MOP UNI – S8x/10x

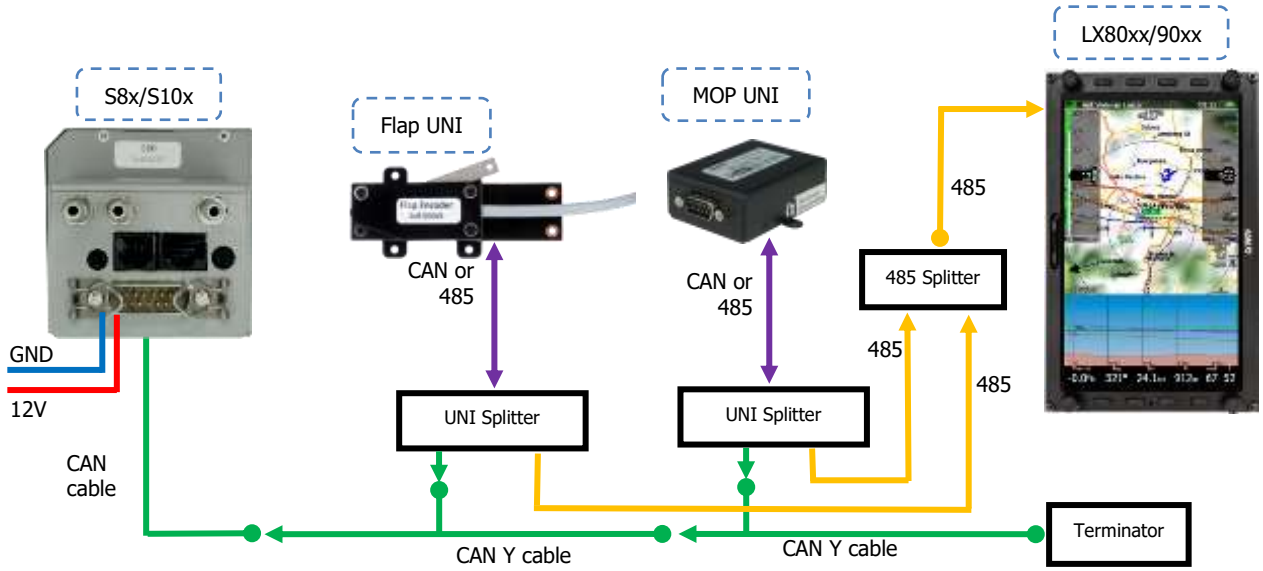

5 Installation and Configuration

5.1 Main Unit and Repeater Unit

Before cutting out the panel the whole cutting plan of the panel, including all instruments, must be prepared. The next figure shows the cut-outs for all types of units that can be installed into the panel.

Prepare the cut-out in the instrument panel according to the drilling template. Position the main display unit in the cut-out in the instrument panel. Secure the main display unit with the attached 2.5 mm screws.

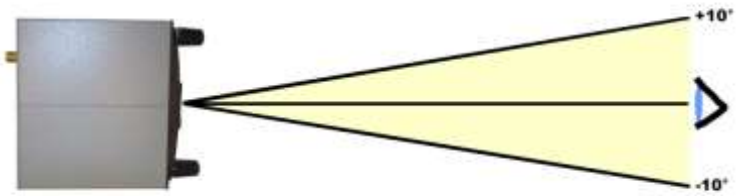

When installing the LX8000 & LX90xx it is not necessary to remove the rotary knobs. It is only necessary to remove the rotary knobs for the LX8080.

For the LX8080, LX8030 and LX8040 remove the press-in covers from the four main rotary switches on the unit. While holding the knobs, slacken the screws with a screwdriver. Now the knobs can be removed (never use force to remove the knobs, you could damage the rotary switches). Remove the four M6 screws. Position the LX80xx in the cut-out in the instrument panel. Secure the LX80xx with the screws. Tighten the knobs and fix the covers.

5.1.1 Installation of Options

All options except AHRS and WI-FI (LX8000D, LX8080D, Remote Control, Radio Bridge, Compass Module & secondary vario indicators) are prepared to be connected to the RS485 system bus by use of RS485 splitting units. Installation of any option is plug-and-play and therefore requires only mechanical installation work. The LX main unit also powers all devices connected to the bus. An automatic fuse built into the LX main unit prevents damage to the digital unit should a short circuit in the wiring or in some attached devices occur.

5.1.2 Cut-Outs

5.1.2.1 LX9000 Cut-Out

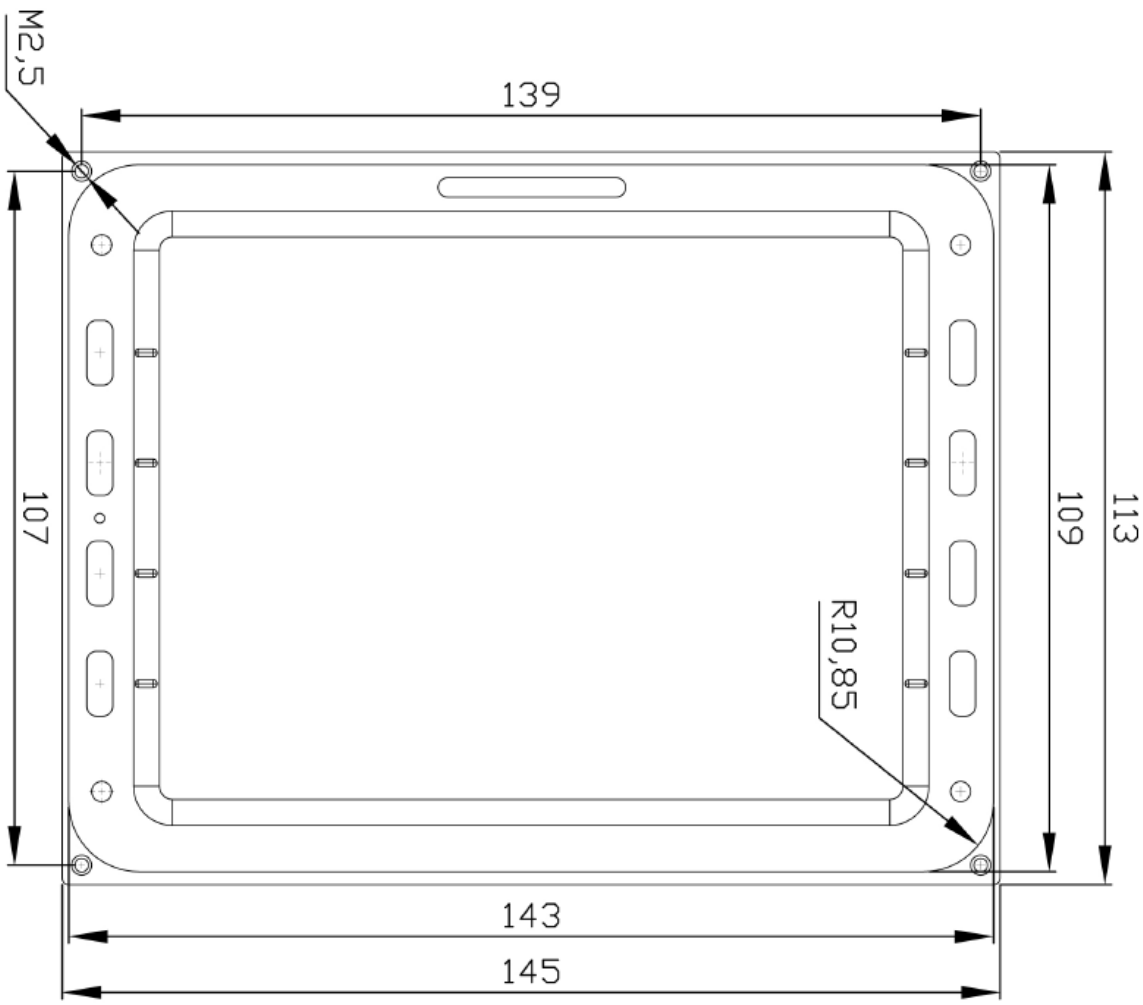

Drawing is not to scale

5.1.2.2 LX9070 Cut-Out

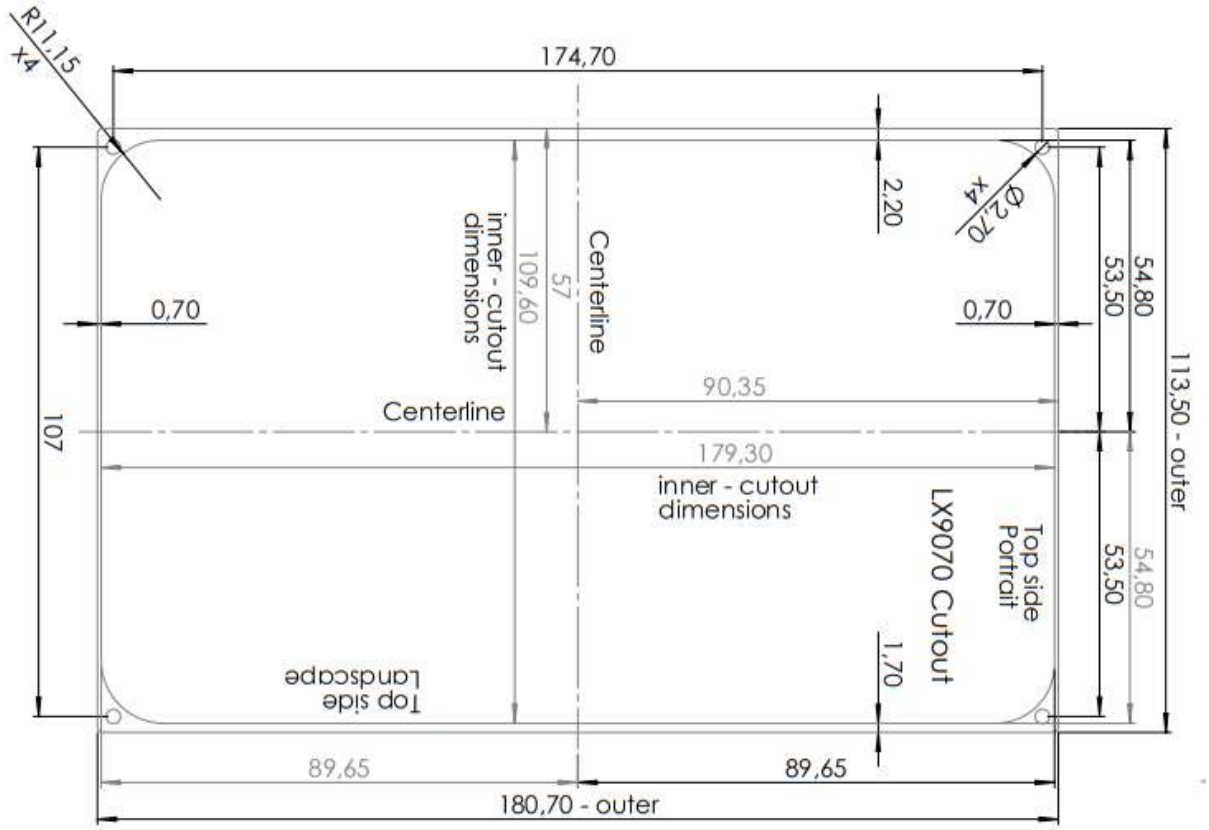

Drawing is not to scale.

5.1.2.3 LX9050 Cut-Out

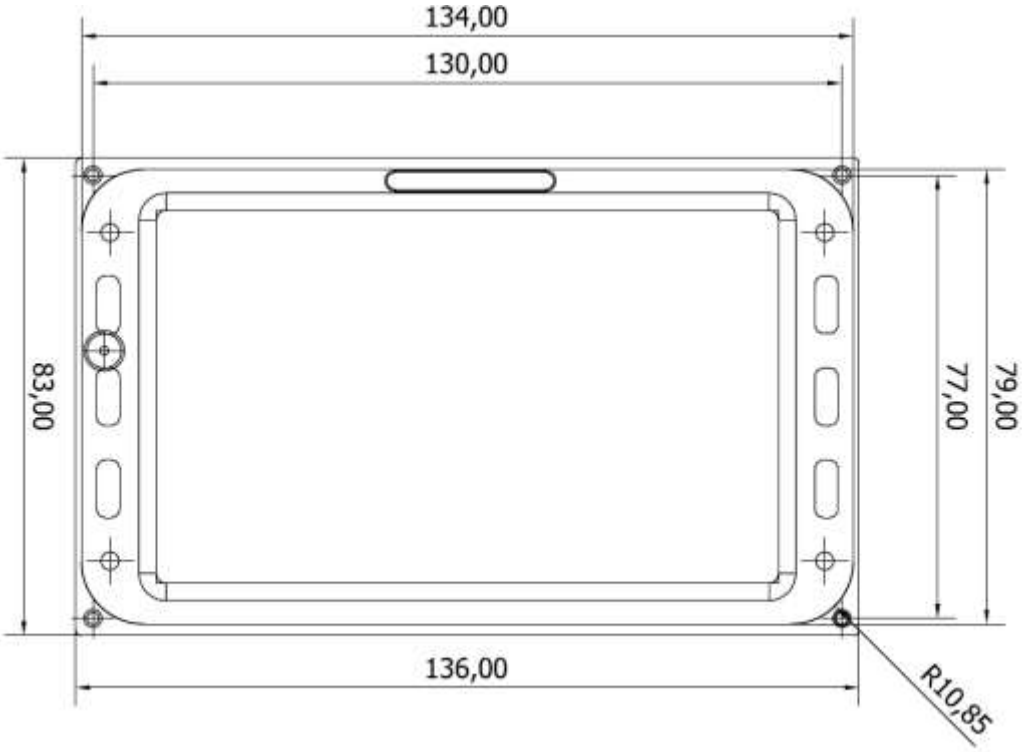

Drawing is not to scale

5.1.2.4 LX8080 Cut-Out

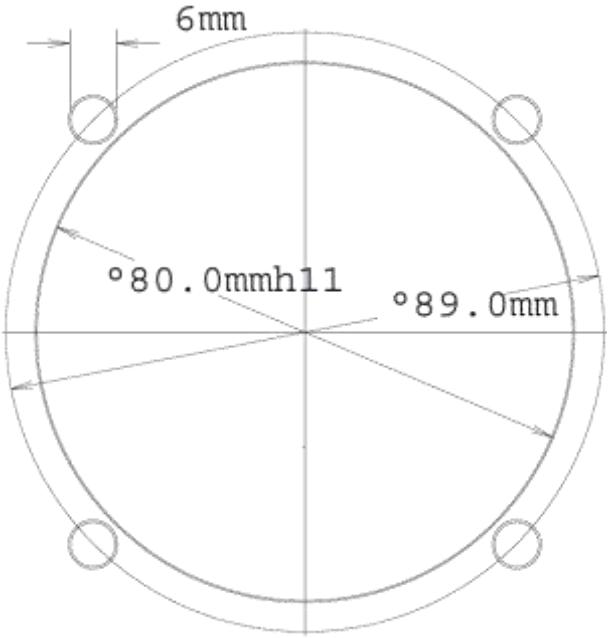

Drawing is not to scale

5.1.2.5 LX8000 Cut-Out

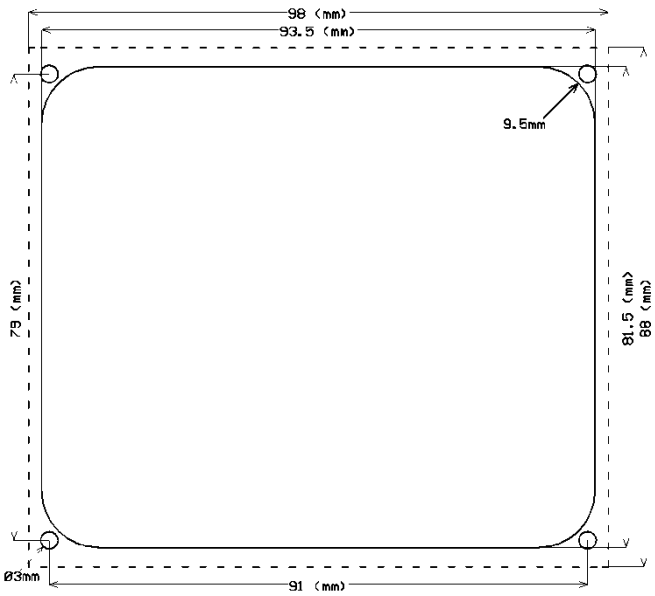

Drawing is not to scale.

5.1.2.6 LX8040 Cut-Out

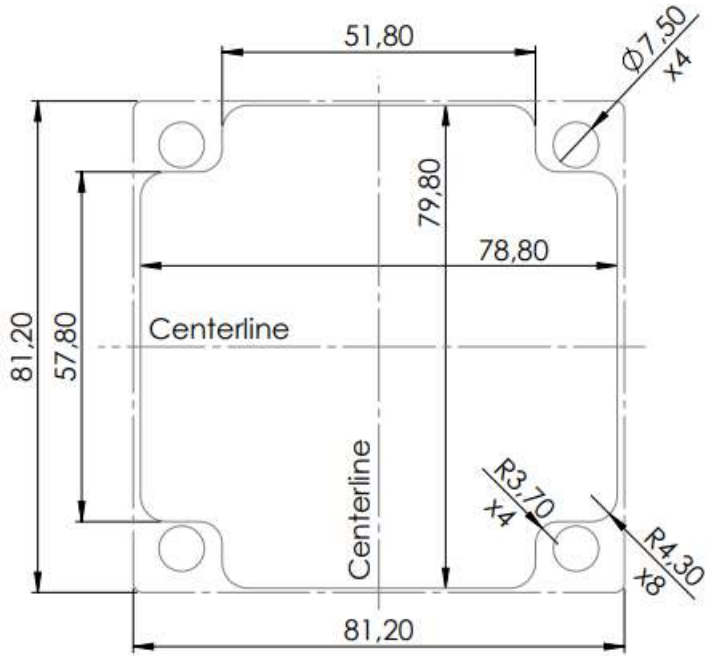

Drawing is not to scale

5.1.2.7 LX8030 Cut-Out

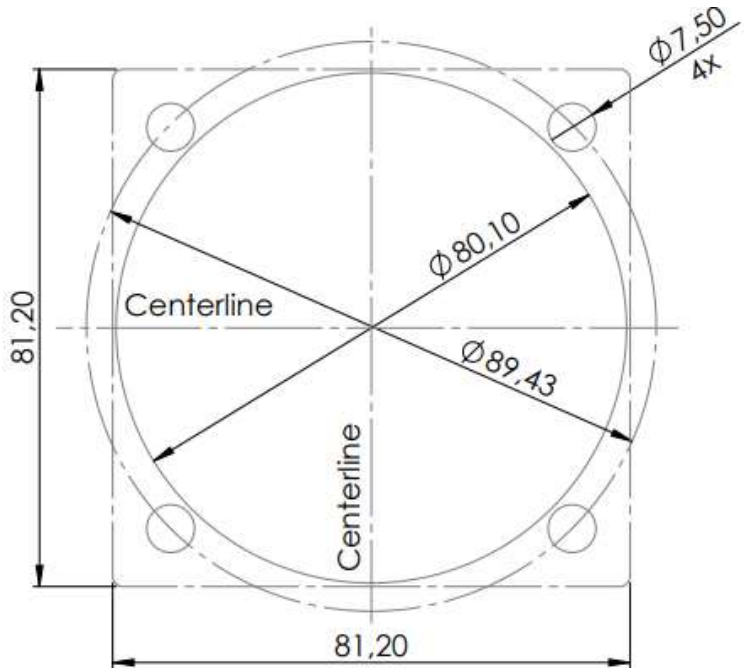

Drawing is not to scale

5.1.2.8 LX8040/8030 External SD-card reader Cut-Out

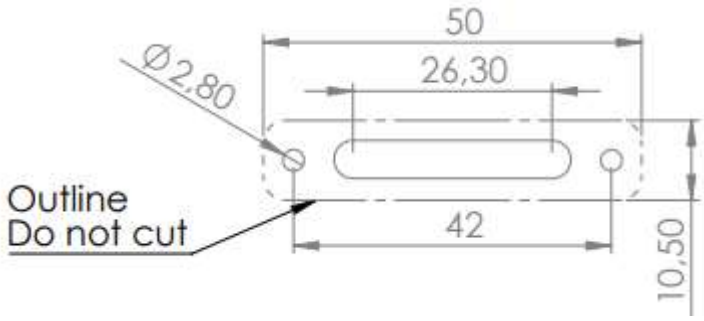

Drawing is not to scale

5.1.3 Dimensions

5.1.3.1 LX9000 GEN3 Dimensions

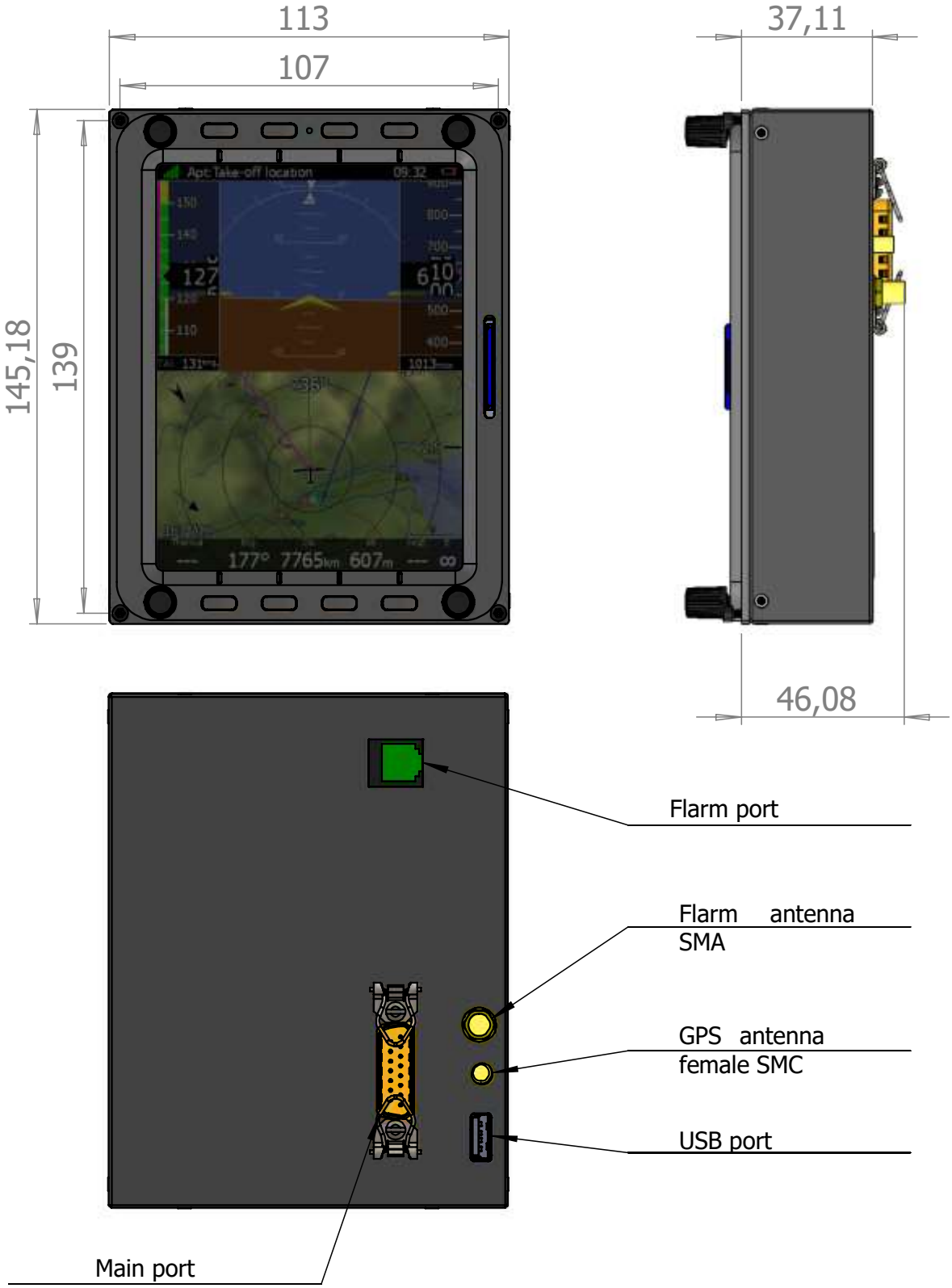

5.1.3.2 LX9000 GEN4 Dimensions

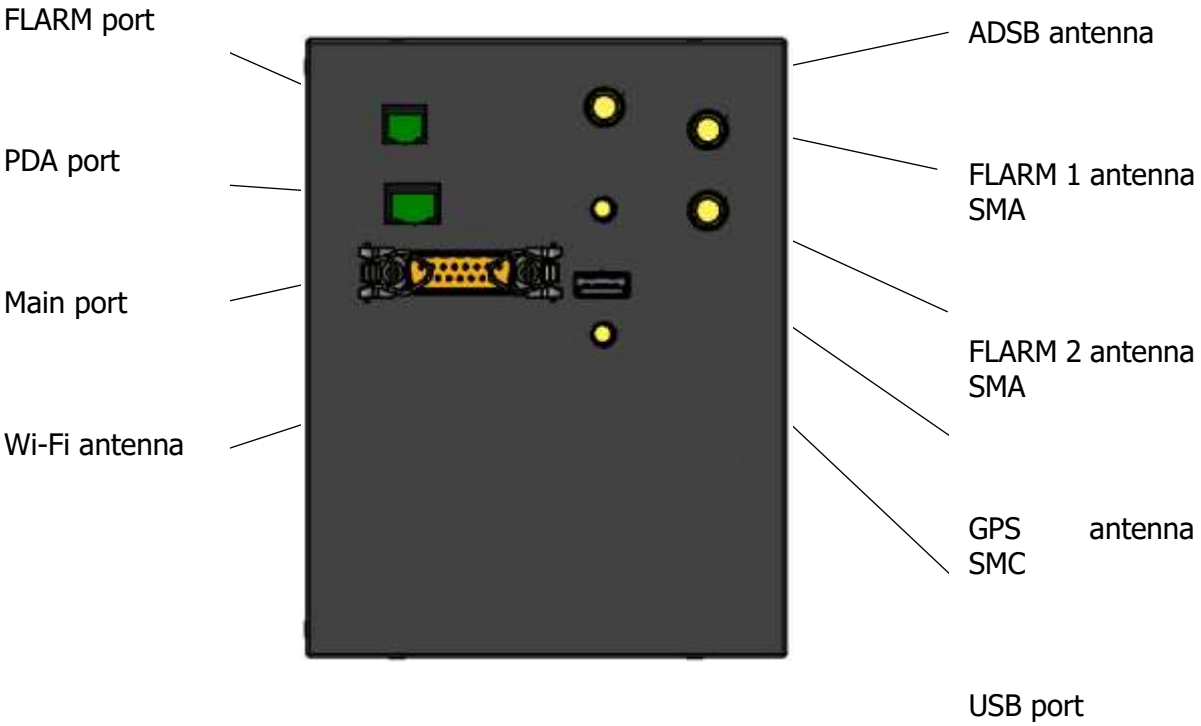

5.1.3.3 LX9070 GEN3 Dimensions

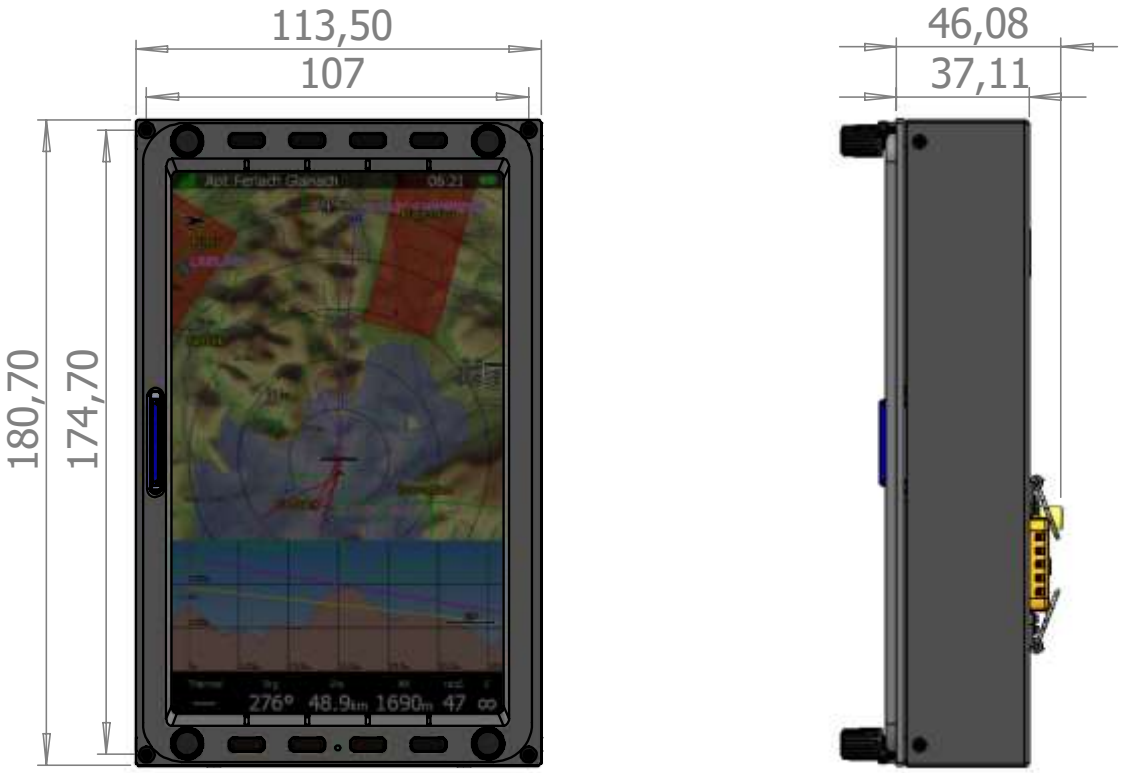

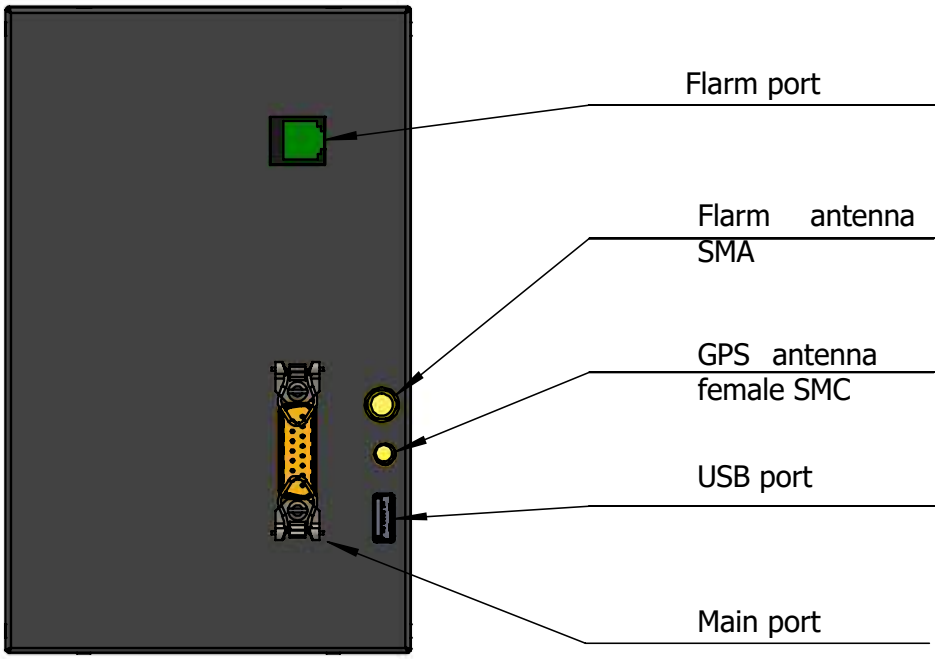

5.1.3.4 LX9070 GEN4 Dimensions

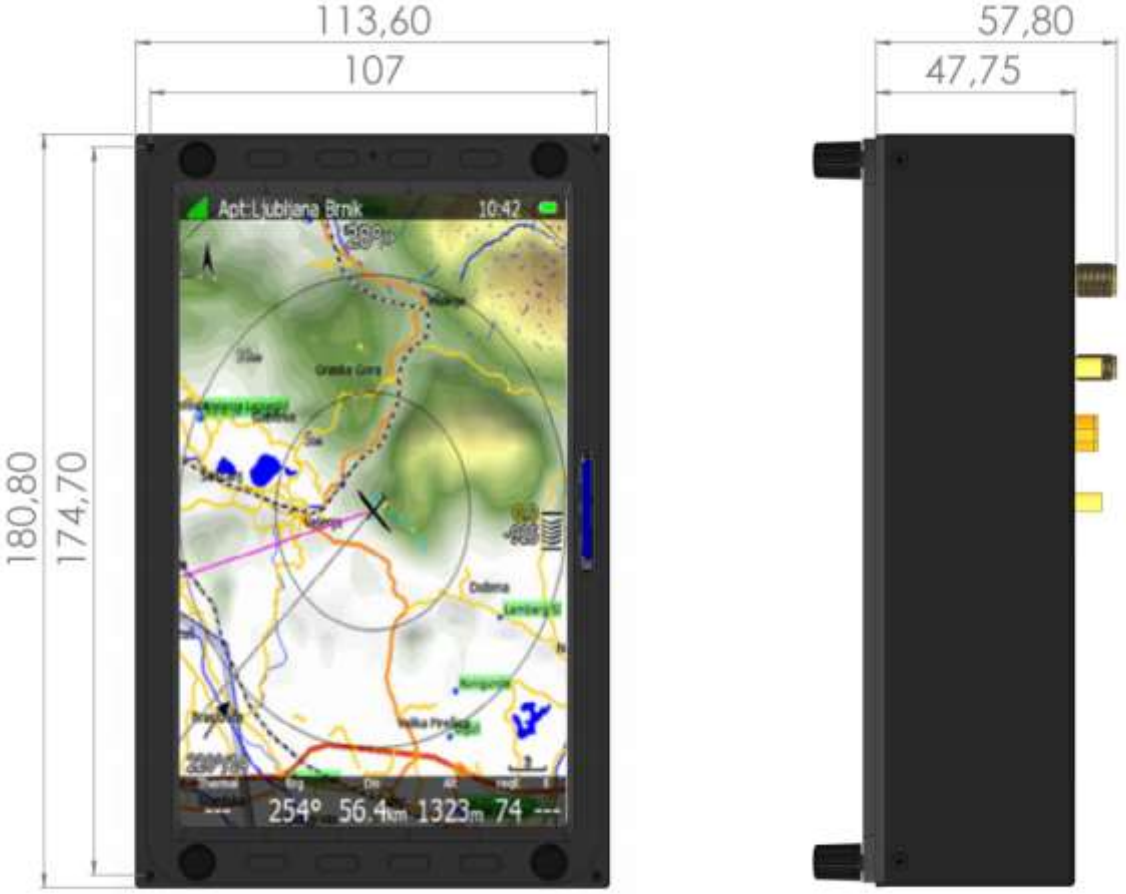

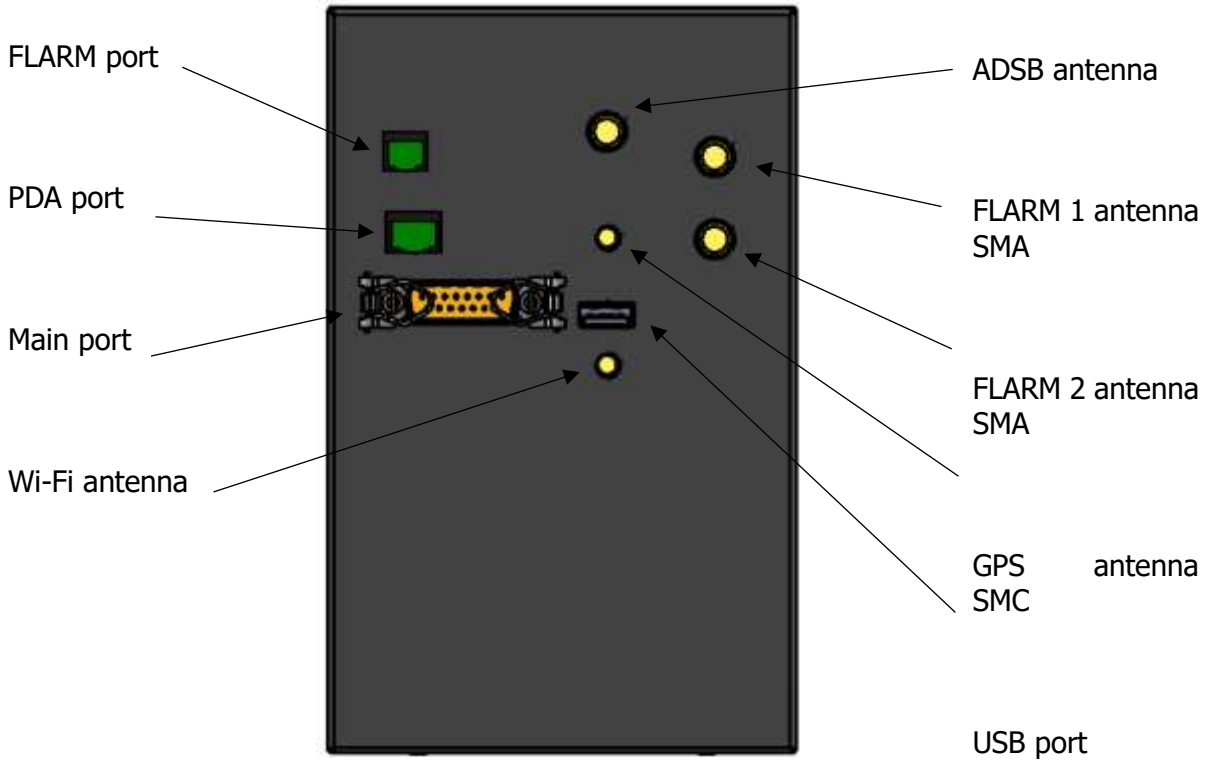

5.1.3.5 LX9050 Dimensions

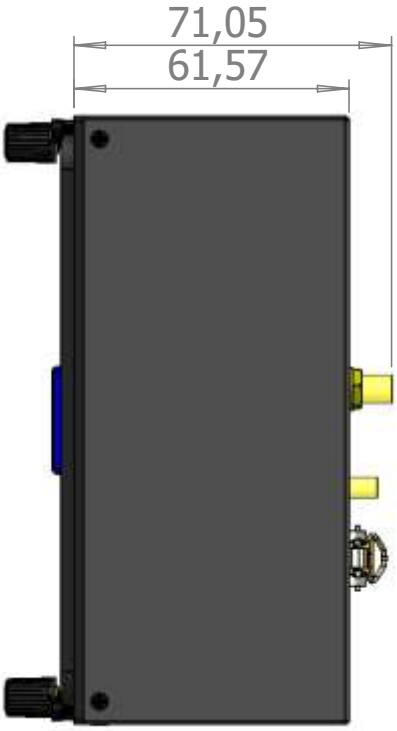

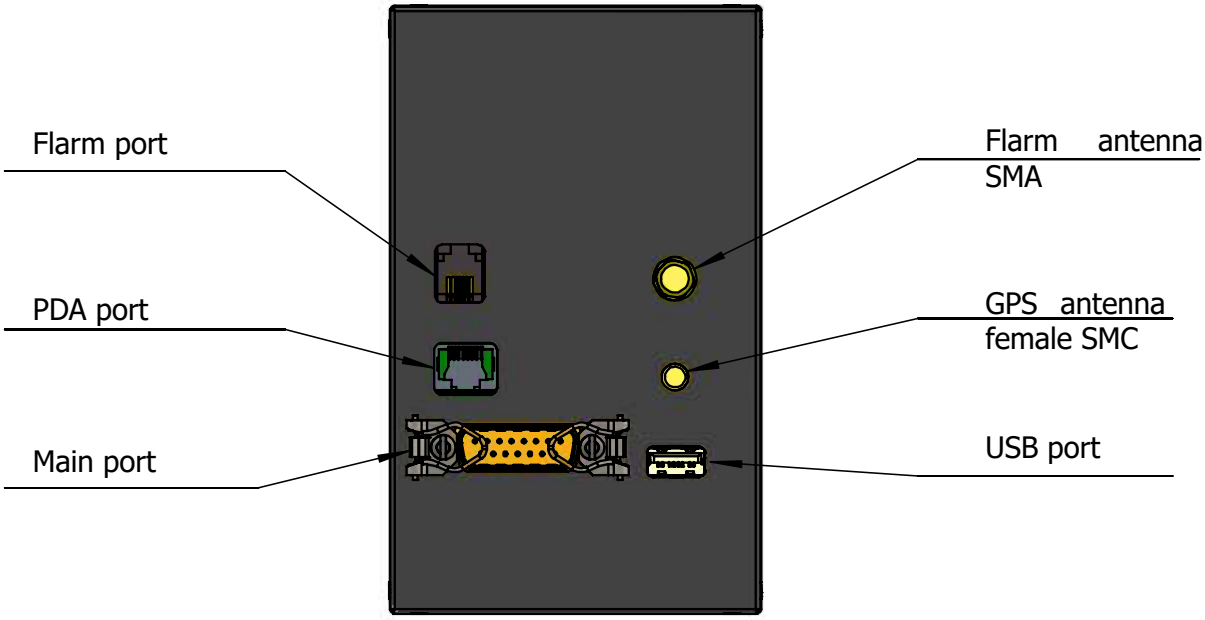

5.1.3.6 LX8080 Dimensions

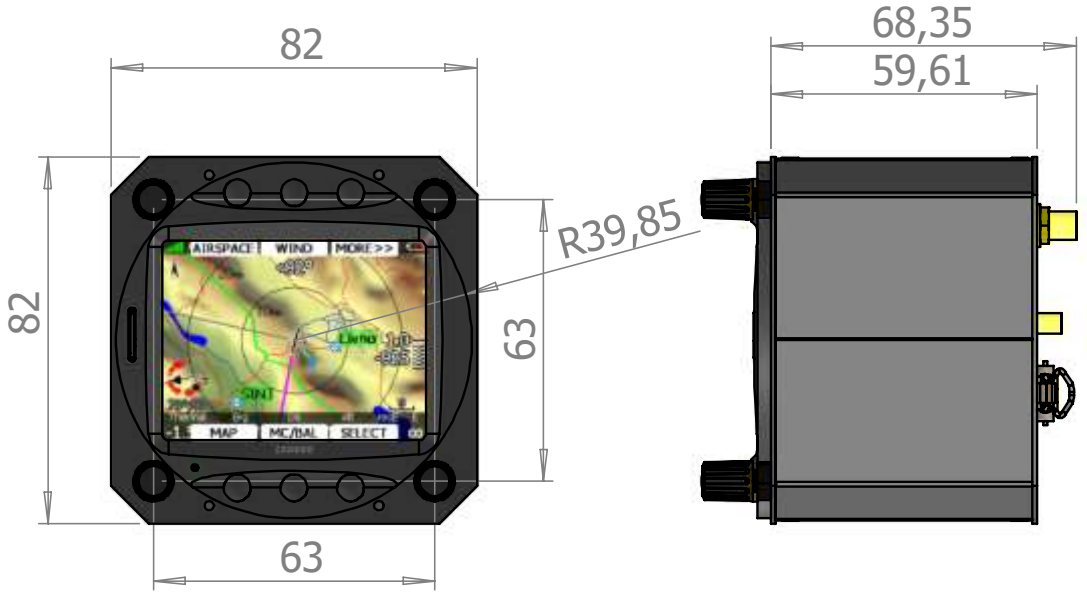

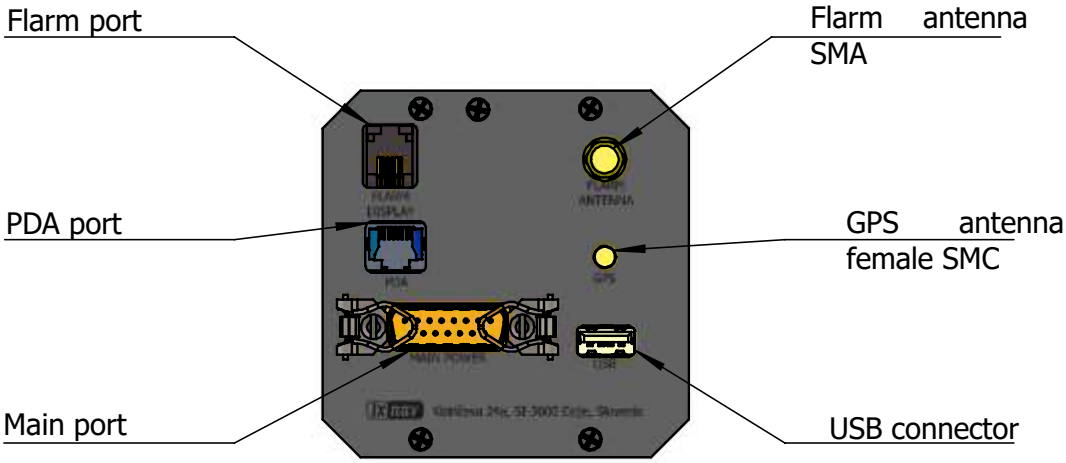

5.1.3.7 LX8000 Dimensions

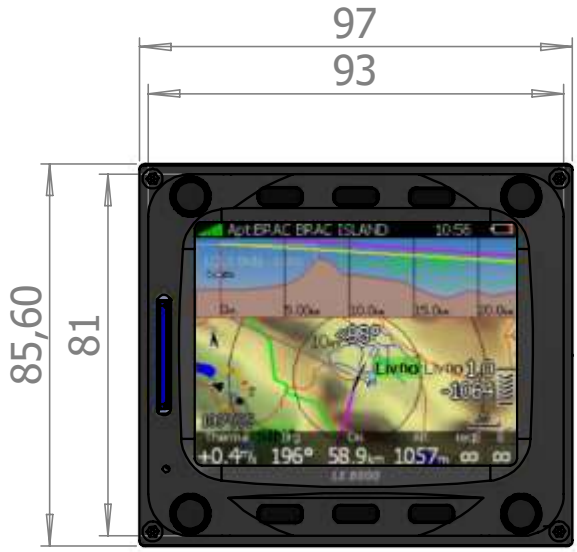

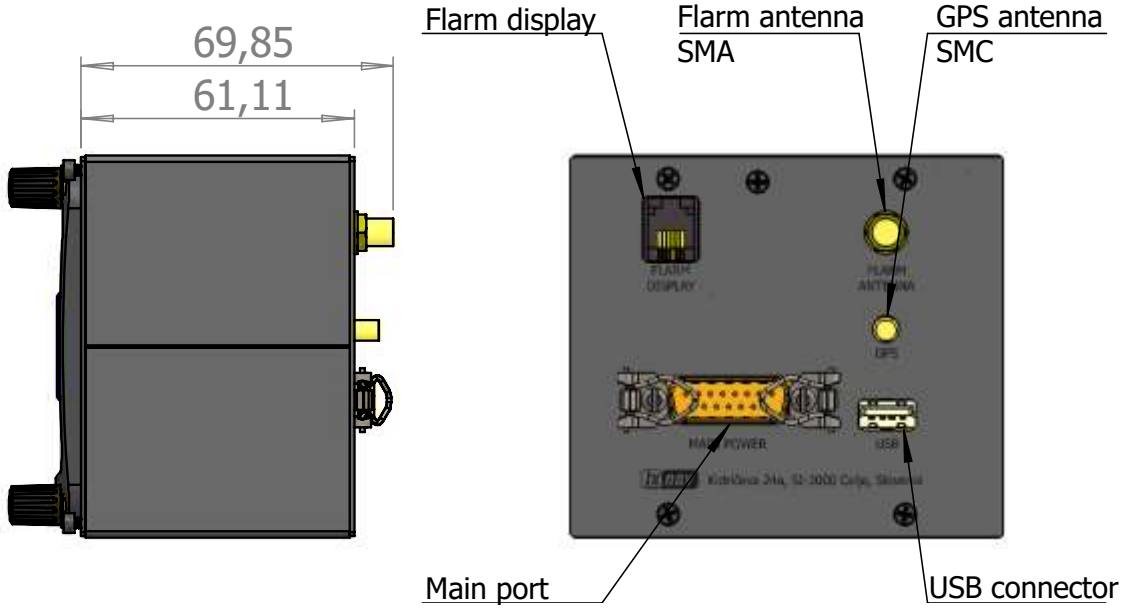

5.1.3.8 LX8040 Dimensions

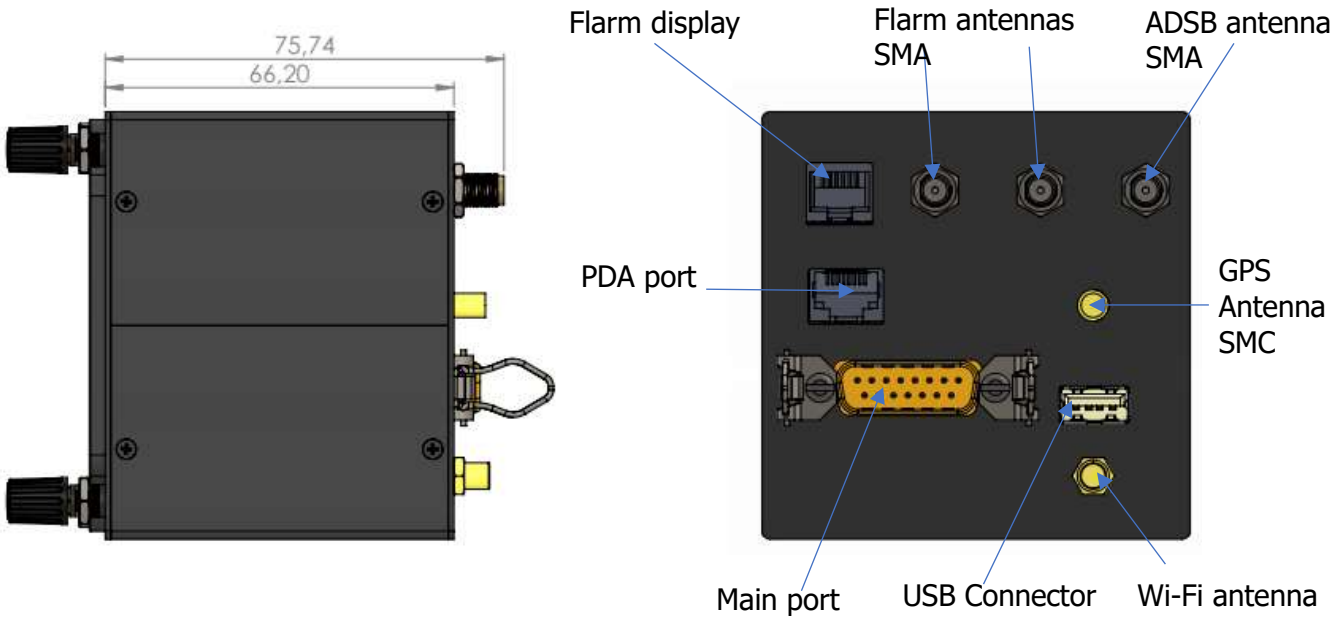

5.1.3.8.1 LX8040 collars

LX8040 out of the box comes with an orange plastic collars around every rotary knob. These collars are there only for protection during transport and must be removed before installation.

5.1.3.9 LX8030 Dimensions

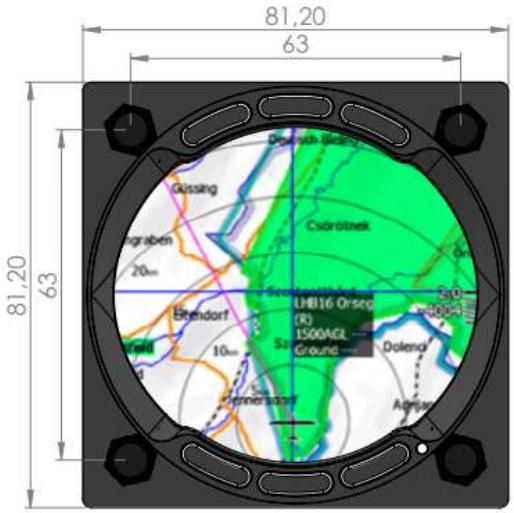

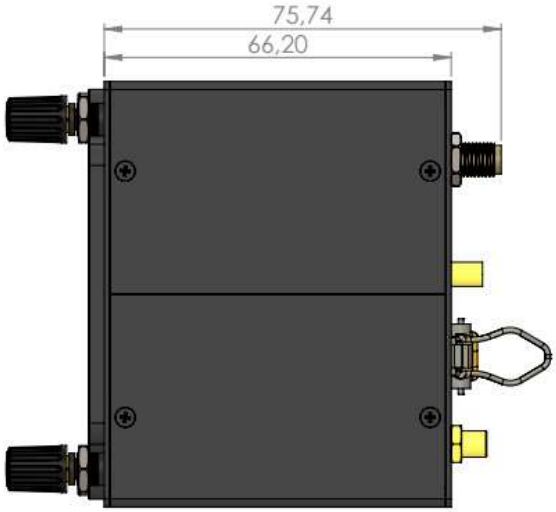

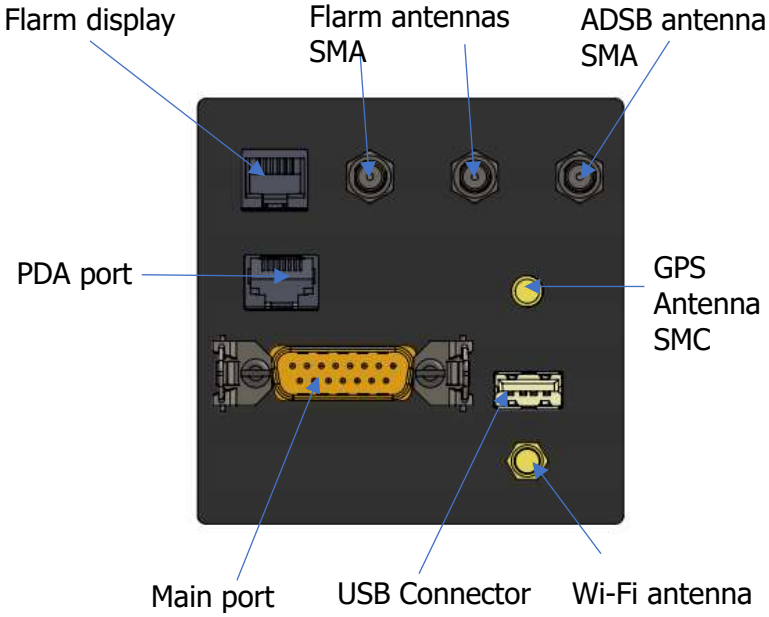

5.1.3.9.1 LX8030 collars

LX8030 out of the box comes with an orange plastic collars around every rotary knob. These collars are there only for protection during transport and must be removed before installation.

5.1.3.10 V5 & V9 Dimensions

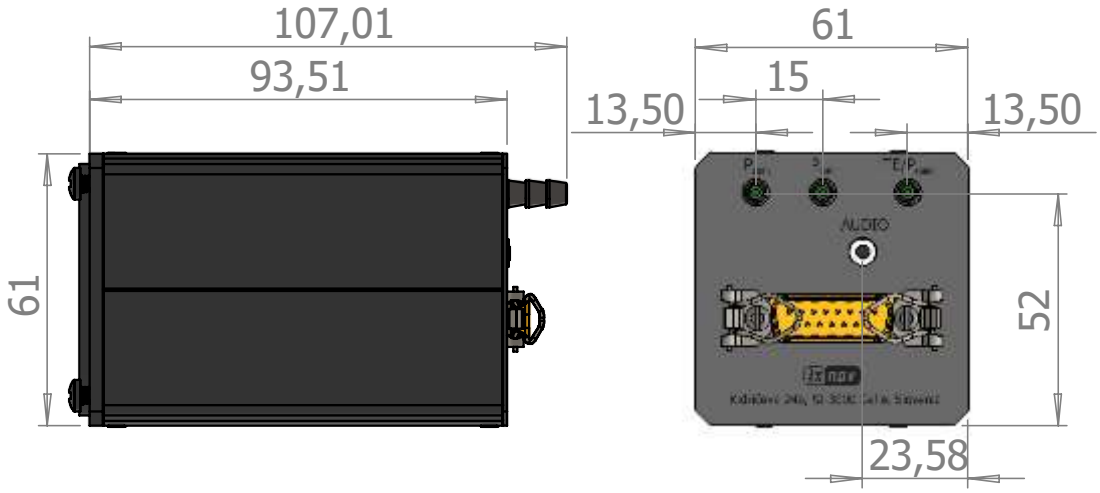

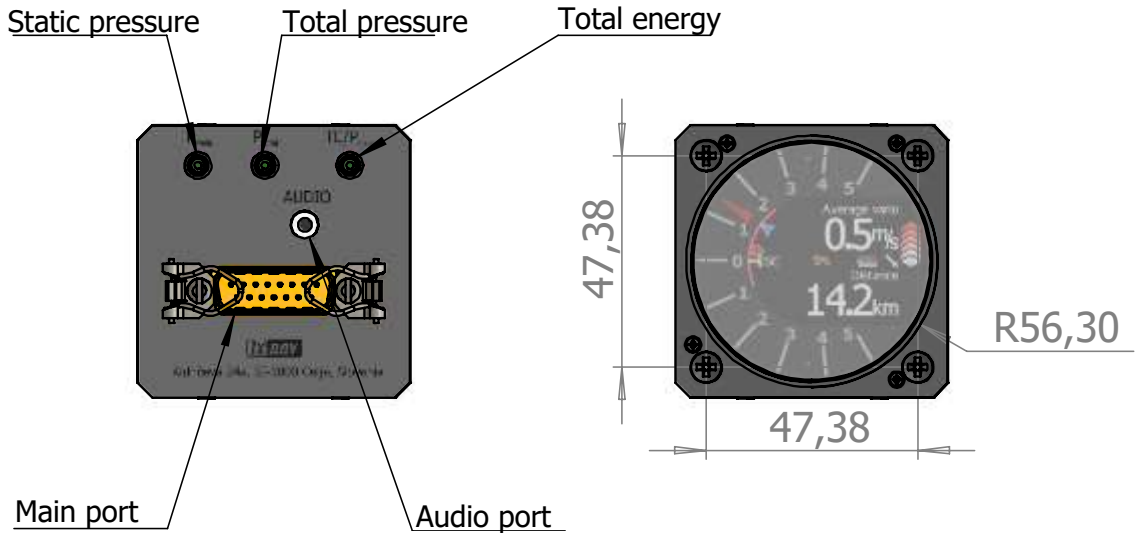

5.1.3.11 V8 Dimensions

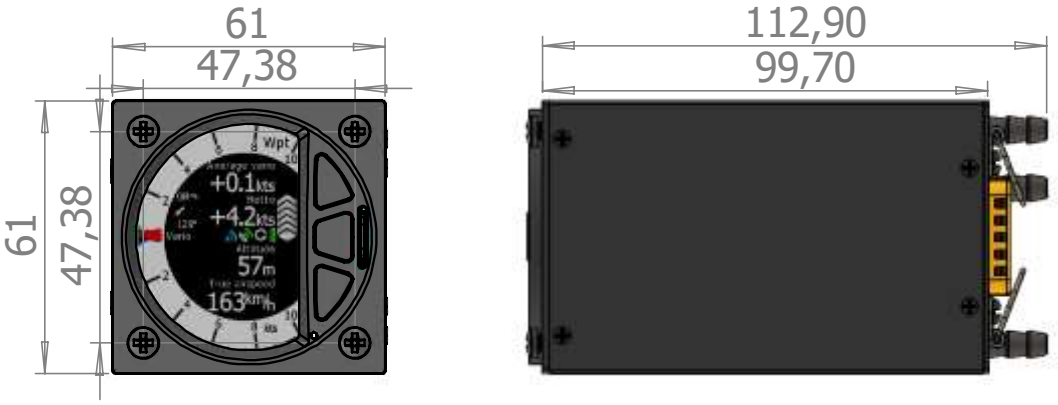

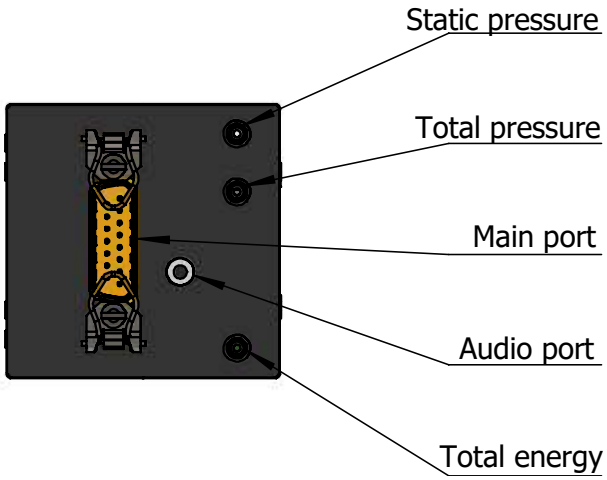

5.1.3.12 V80 Dimensions

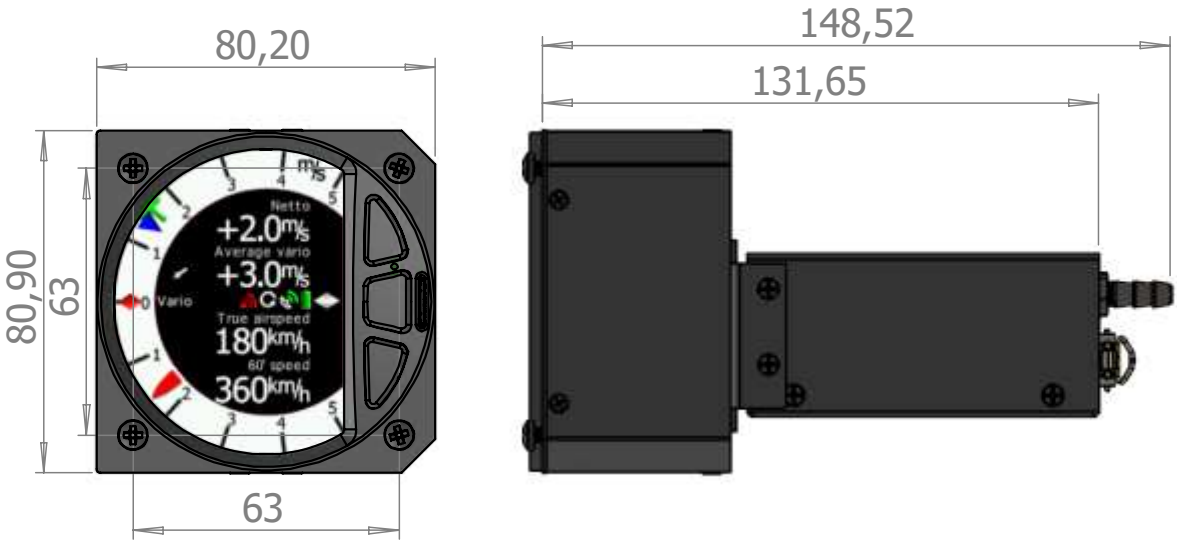

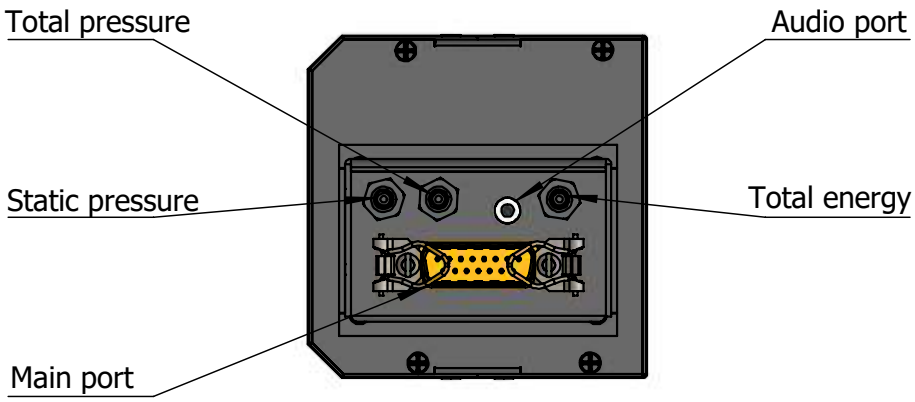

5.1.3.13 I5 Dimensions

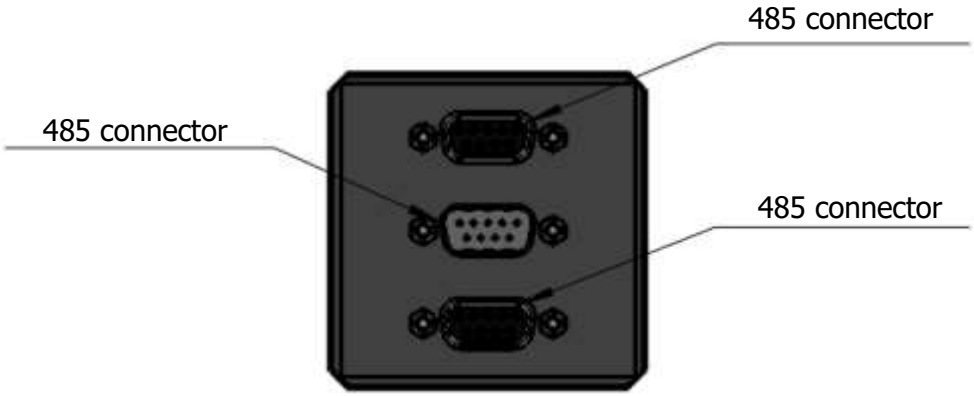

5.1.3.14 I8 Dimensions

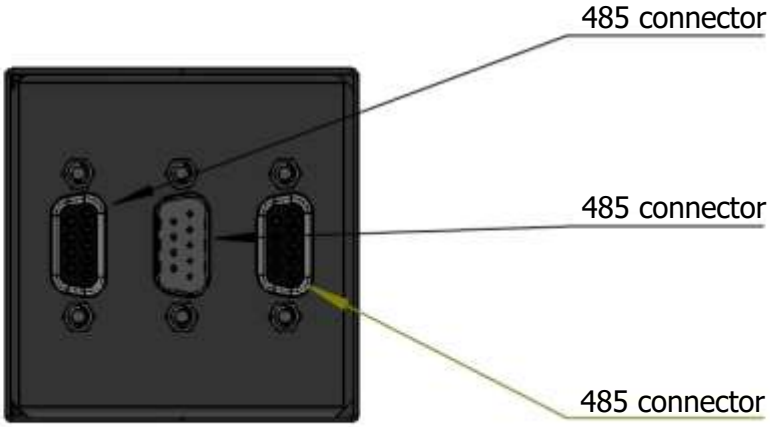

5.1.3.15 I80 Dimensions

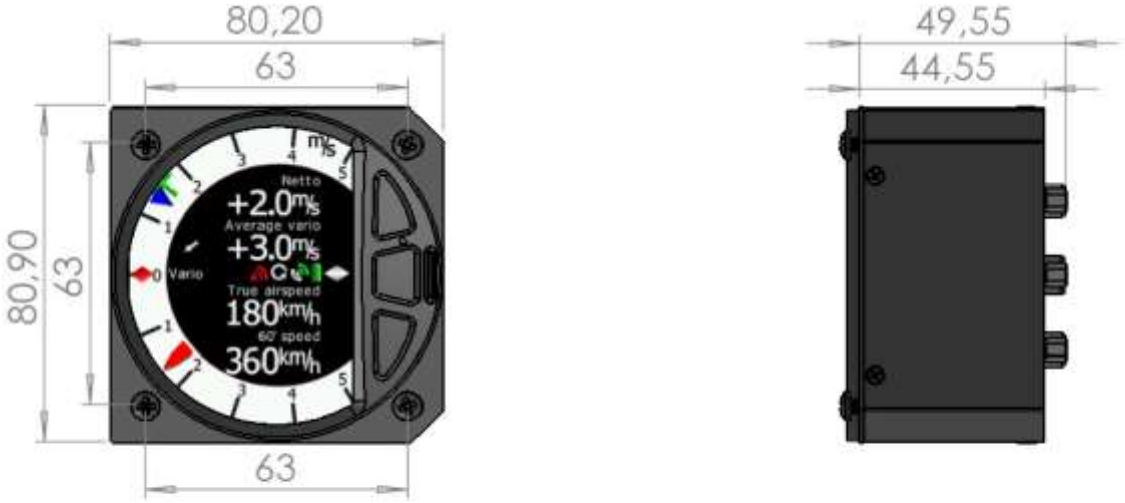

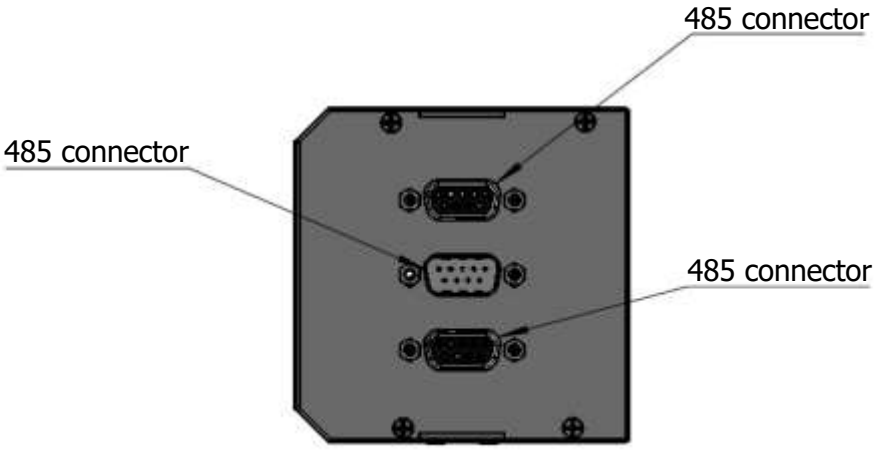

5.1.4 Ports

5.1.4.1 LX9000

5.1.4.2 LX9050

5.1.4.3 LX9050 Simple

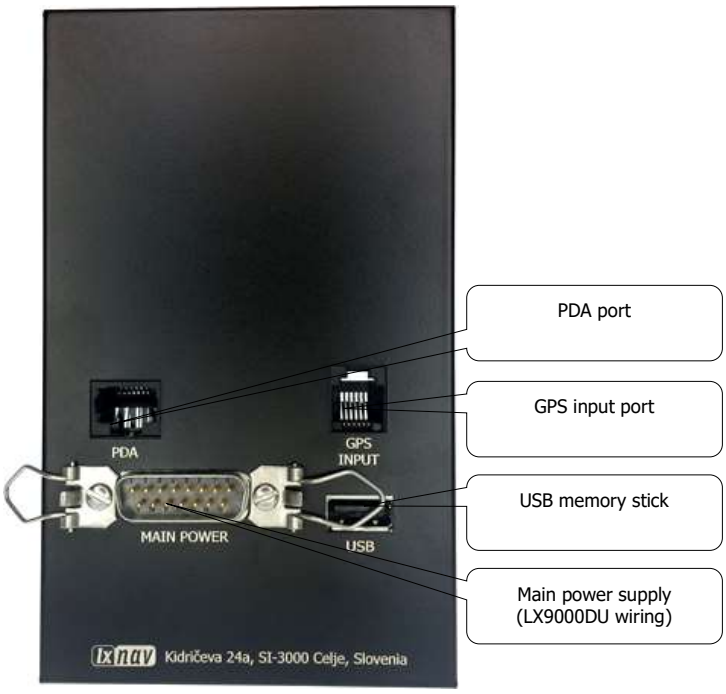

5.1.4.4 LX8000 Digital Unit

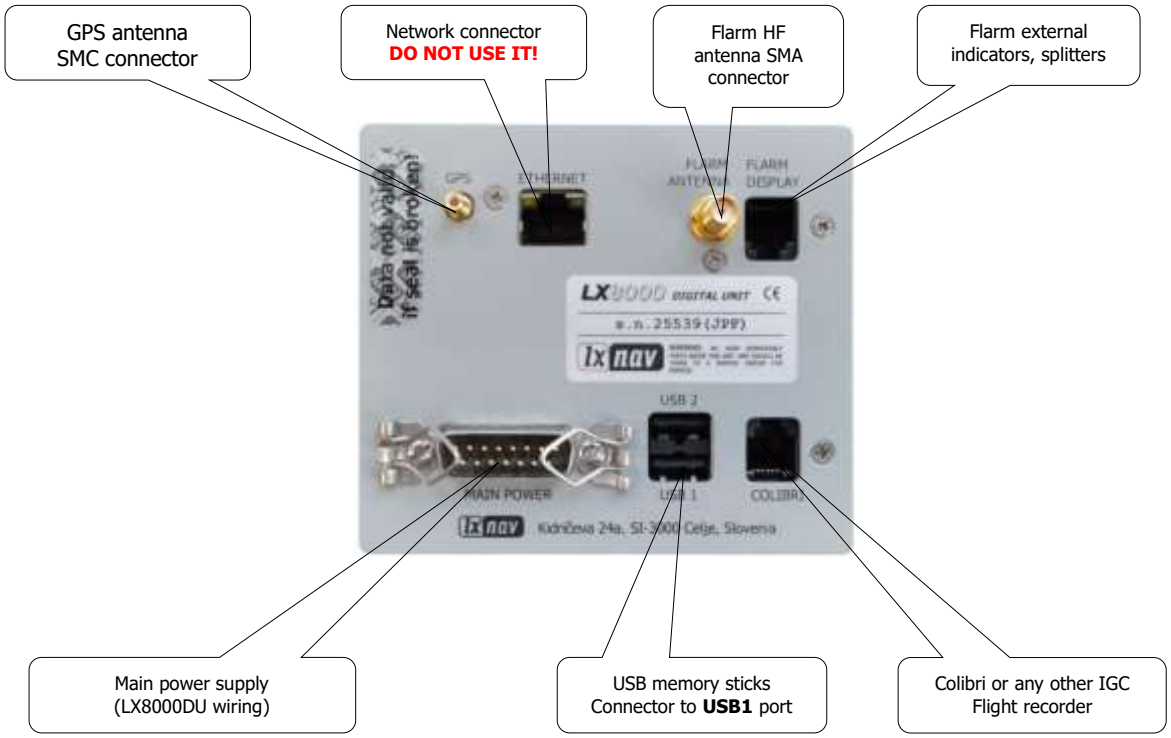

5.1.4.5 LX8000 Digital Unit Version 2

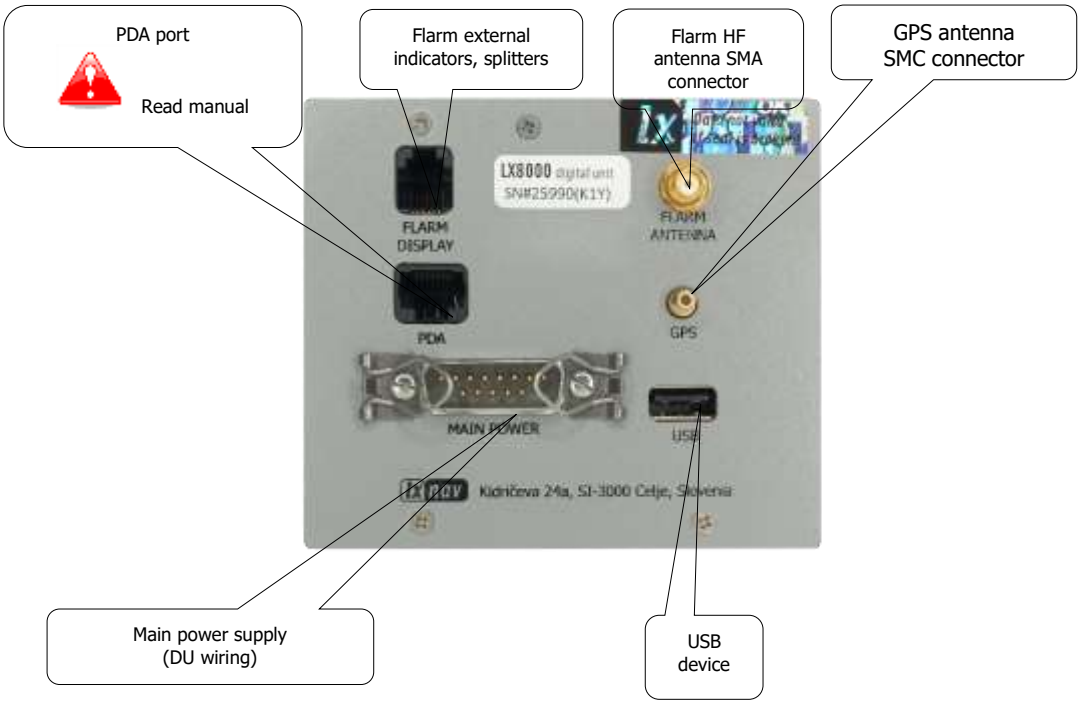

5.1.4.6 LX8080 Digital Unit

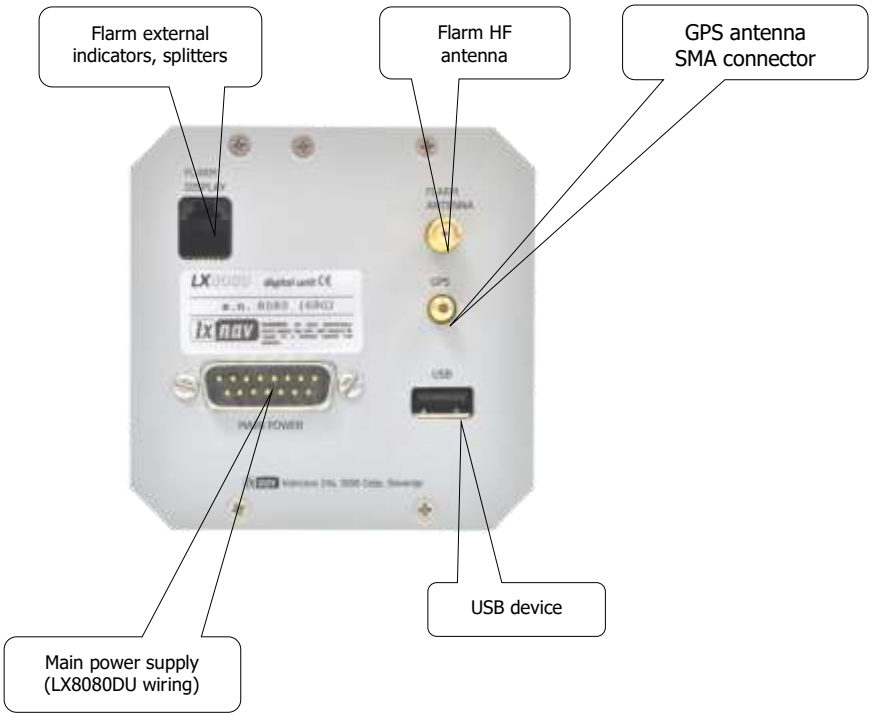

5.1.4.7 LX8080 Digital Unit Version 2

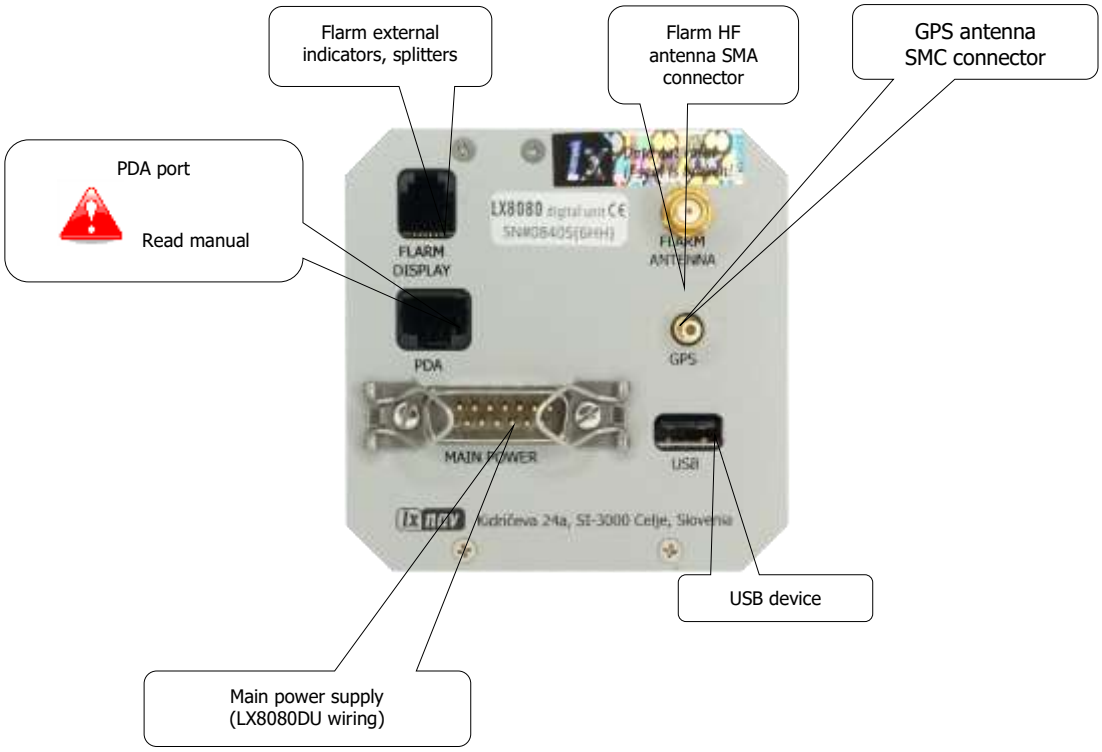

5.1.4.8 LX8080 Digital Unit Simple Version

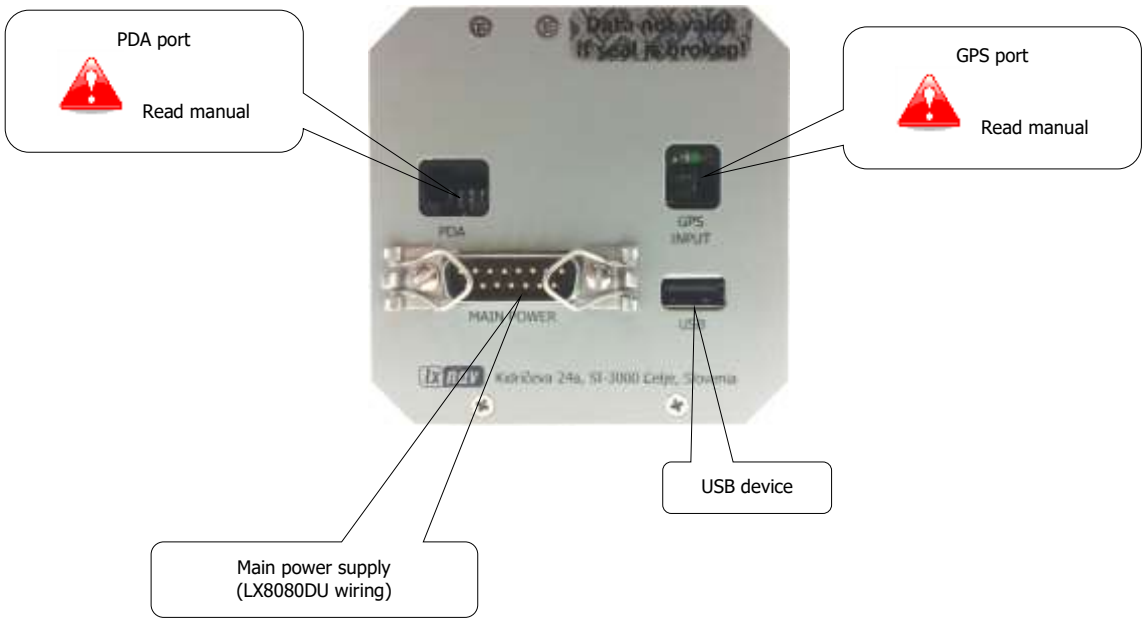

5.1.4.9 LX8040 Digital Unit

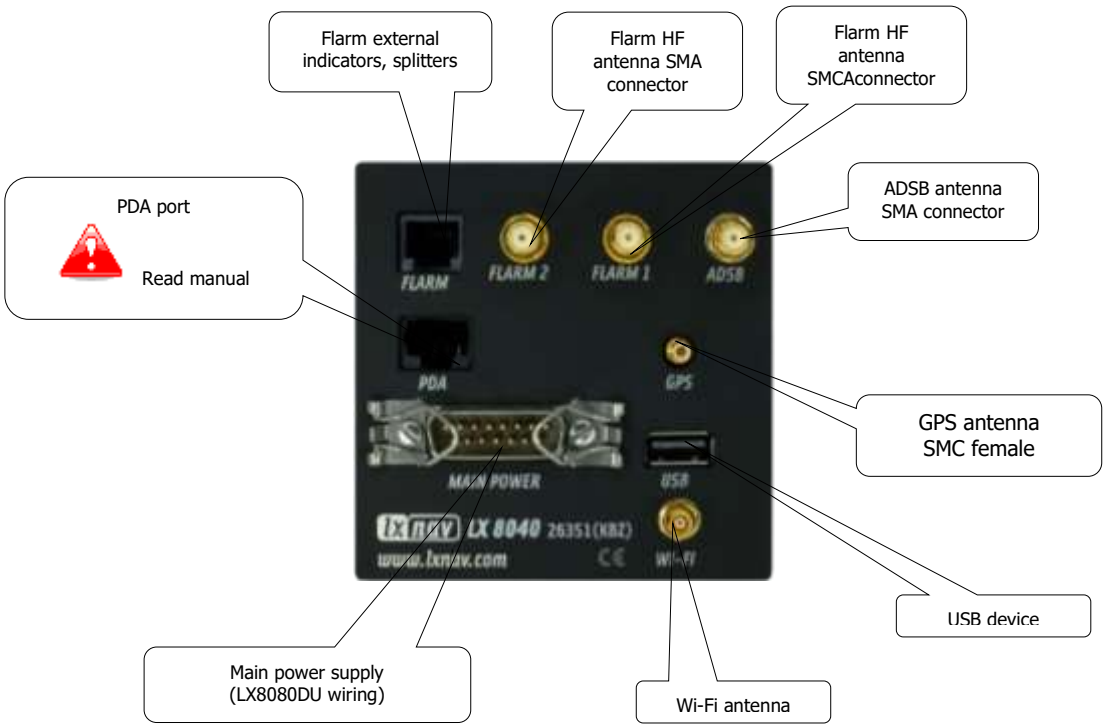

5.1.4.10 LX8030 Digital Unit

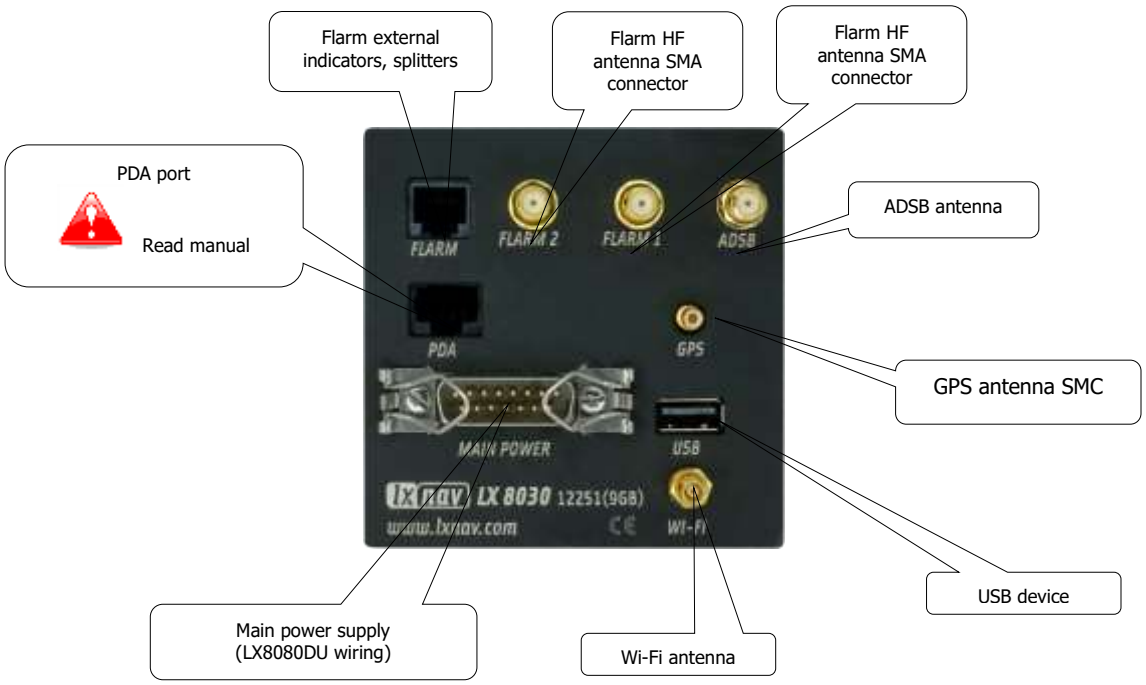

5.1.4.11 USB port

Is designed to connect low power USB devices (WiFi, Memory stick,…).

USB port is not designed for charging any external devices!

5.1.4.12 Flarm Port (for LX800 Versions 1 – no 12V Output)

Pin Number	Description
1	open
2	3V DC (max 100mA)
3	GND
4	Flarm Data Out
5	Flarm Data In
6	Ground

5.1.4.13 Flarm Port on LX9xxx

Pin Number	Description
1	(output) 12V DC, to supply GPS
2	(output) 3V DC (max 100mA)
3	GND
4	Flarm Data Out
5	Flarm Data In

6	Ground

The Flarm port can be also configured on newer types of LX9000D. It can be enabled in Setup-NMEA Output by selecting FLARM.

5.1.4.14 PDA Port (RJ45)

Newer types of units have also an expansion port called PDA (RJ45). Various types of PDA devices can be attached to this port.

Pin Number	Description
1,2	Ground
3	(output) Transmit from LXNAV RS232 (e.g. Computer, IPAQ38/39xx)
4	(input) Receive to LXNAV RS232 (e.g. Computer, IPAQ38/39xx)
5	(output) Transmit from LXNAV V7 LV-TTL (3.3V) (e.g. Oudie, HP302, HP31x)
6	(input) Receive to LXNAV LV-TTL (3.3V) (e.g. Oudie, HP302, HP31x)
7,8	5V OUTPUT (maximum 1A)

The RJ45 plug is NOT designed in accordance with IGC standard. It can be used only with a dedicated cable. Do not plug unknown cables into it as it may damage the unit or the PDA port.

The PDA port can be connected to via the following connection cables:

Device	Cable Code
OUDIE	CC-NP-OUDIE1
Generic RS232 with female DB9	CC-NP-232
IPAQ 310/314	CC-NP-IPAQ310
IPAQ 38/39xx/47xx	CC-NP-38

5.1.4.15 GPS Ports (RJ12) only on Simple Version

1 2 3 4 5 6
Pin numbers

1 2 3 4 5 6
Pin numbers

Pin Number	Description
1	(output) 12V DC, to supply GPS
2,3	N.C.
4	(input) Receive to main display unit RS232 (e.g.: NANO power 232)
5	(output) Transmit from LXNAV main display unit RS232 (e.g.: NANO power 232)
6	Ground

5.1.4.16 Colibri Port

6 5 4 3 2 1
Pin numbers

Pin Number	Description
1	GND
2	RS232 RX (input – receive to LX8000)
3	RS232 TX (output - transmit from LX8000)
4	NC – (no connection)
5	NC – (no connection)
6	12 V (output)

5.1.4.17 PC Port

PC port is rounded 5 pin binder connectors on the main harness. It can be configured under setup-hardware-NMEA. User can select baudrate and types of NMEA sentences. On this port can be connected, varios, PDAs or just simple NMEA feed to transponder.

5.2 Connection and Functionality Check of All Peripheral Units

The main display unit is connected to 12 Volt power via the 15-pin SUB-D connector. The main display unit, vario unit and other vario indicators are connected via the RS485 bus and the connectors are labelled with "**RS485**" at each end.
Please ensure that both units are connected correctly before the first power on. The power wires (red and blue) should be connected to the main display unit.

Even though there is an automatic fuse in the instrument it is VERY IMPORTANT to use an external fuse (max. 3A). Power supply cables should use a minimum of 0.5 mm² AWG20 wires.

When the main unit is connected to the vario and other peripheral units, we can carry out a functionality test. After power up the vario unit should turn on. Other peripheral units have their own visual indication, so they will be tested via the main unit.

5.2.1 Vario Unit

5.2.1.1 Connecting the Vario Unit

The vario unit is connected to the main unit via the RS485 bus. An SC cable is used for the external switch which is used for switching between climb and cruise mode. In case that the SC is connected to the flaps switch, the VP (vario priority) is connected to the switch on the stick. Inputs IN1...4 is used to connect to gear switch, airbrakes, etc...

5.2.1.2 Cut-Outs

5.2.1.2.1 Cut-Out for V5 and V9

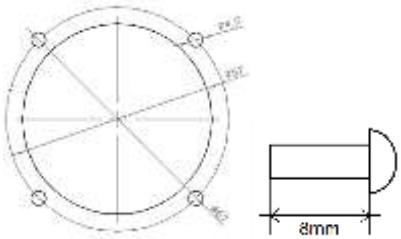

Drawing is not to scale

5.2.1.2.2 Cut-Out for V8

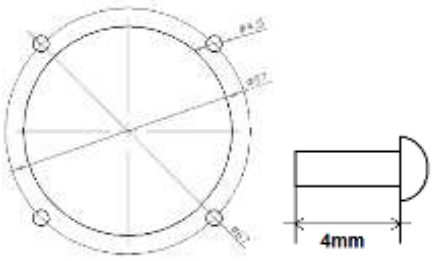

Drawing is not to scale

Length of screw is limited to max 4mm!

5.2.1.2.3 Cut-Out for V80

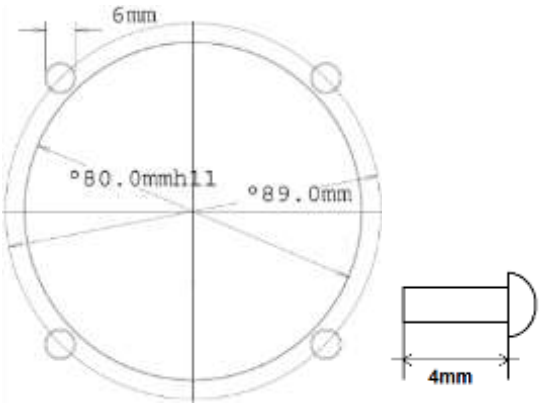

Drawing is not to scale

Length of screw is limited to max 4mm!

5.2.1.1 Wiring

5.2.1.1.1 Main unit

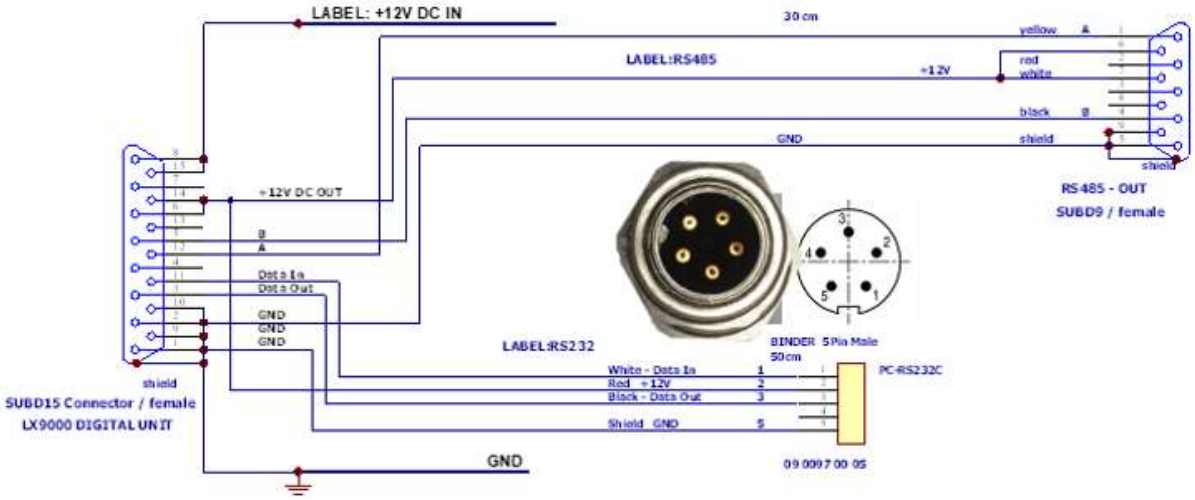

5.2.1.1.2 Second seat unit (DS cable)

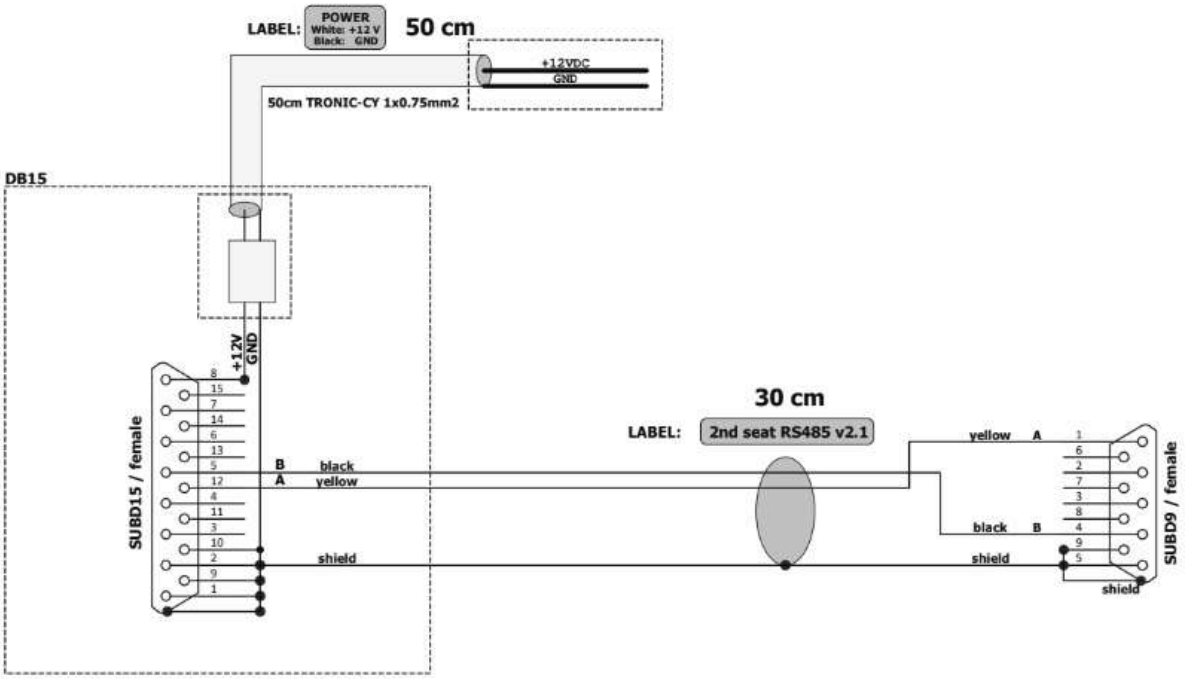

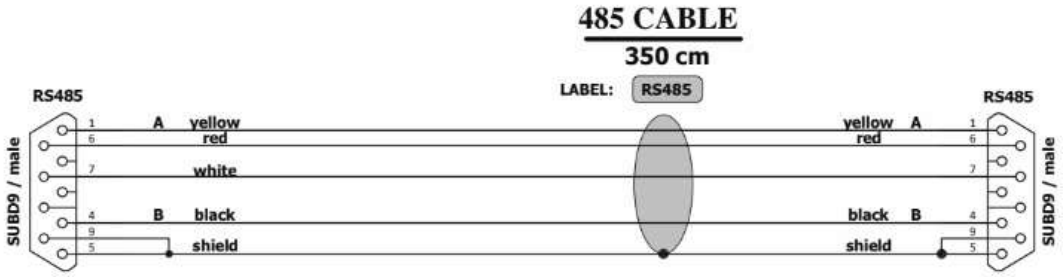

5.2.1.1.3 V5 Ver1 Wiring with CAN Bus (discontinued)

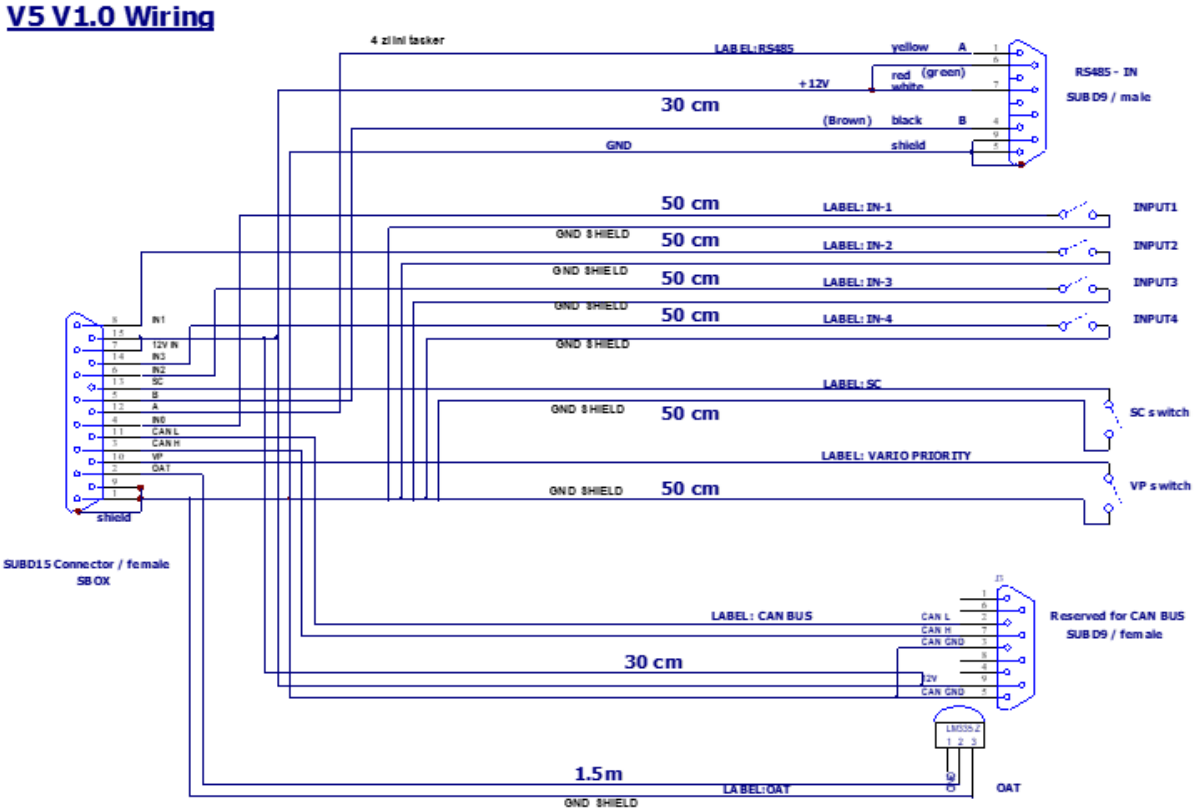

There is also CAN bus connector, which is prepared for the future.

DO NOT CONNECT IT ANYWHERE

5.2.1.1.4 V5/V8/V9/V80 Vario Unit Wiring

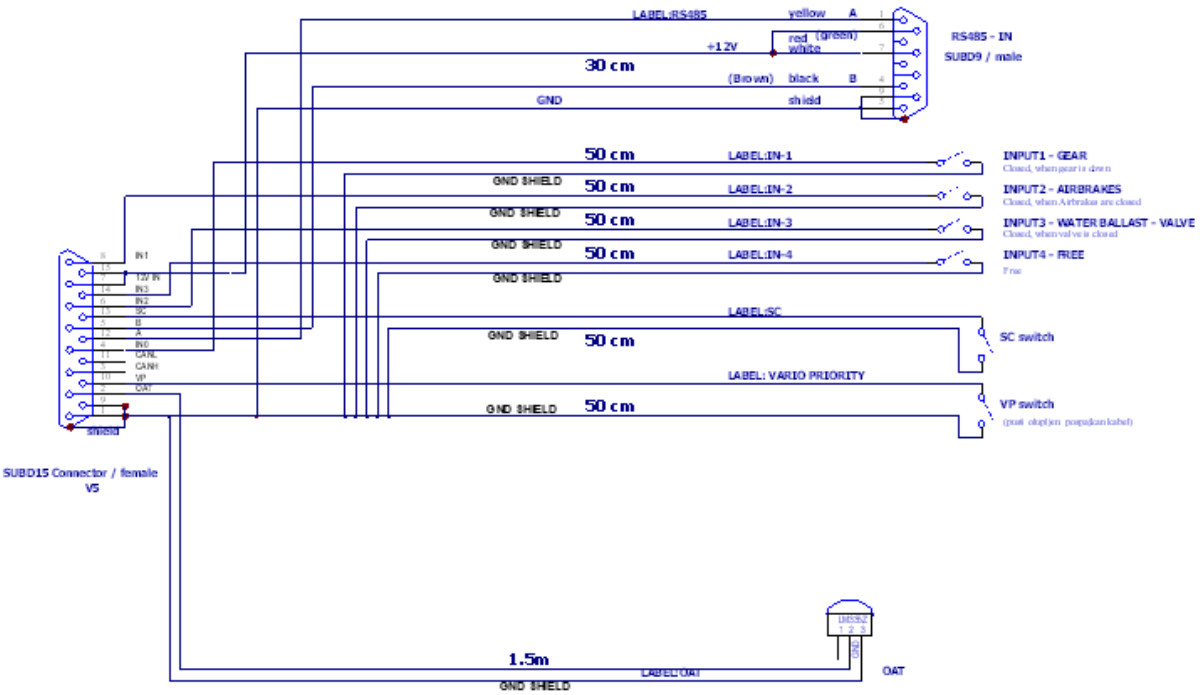

5.2.1.1.5 USB-D or Analog Unit Wiring (discontinued)

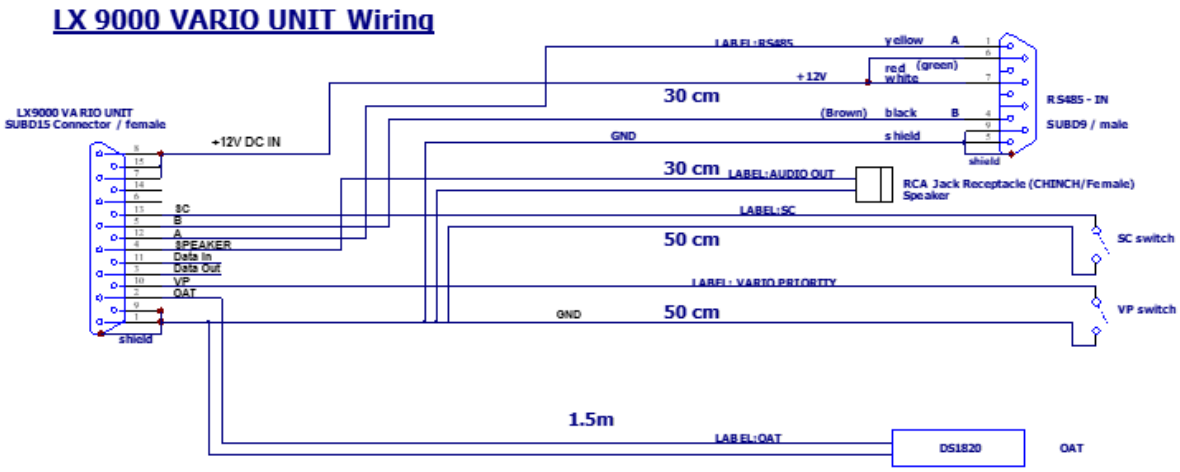

5.2.1.2 Connection to the Bus

The vario is connected to the main instrument via the RS485 bus directly or via a RS485 splitter if there will be more units connected to the system.

5.2.1.3 Pneumatics

Please carefully connect the tubes to the correct port of the vario unit.
Three pressure connectors are fitted to the back of the vario unit. A label shows their functions.

The V9 vario has the same functionality as the V5, the only difference is that has built in inertial platform (AHRS).

- P_{static} means static pressure connector.
- P_{total} means pitot or total pressure connector.
- TE means total energy TE connector.

If the unit is to be configured for electronic TE compensation the connections are as follows:

- P_{static} = Static
- P_{total} = Pitot or Total pressure
- TE/P_{static} = Static

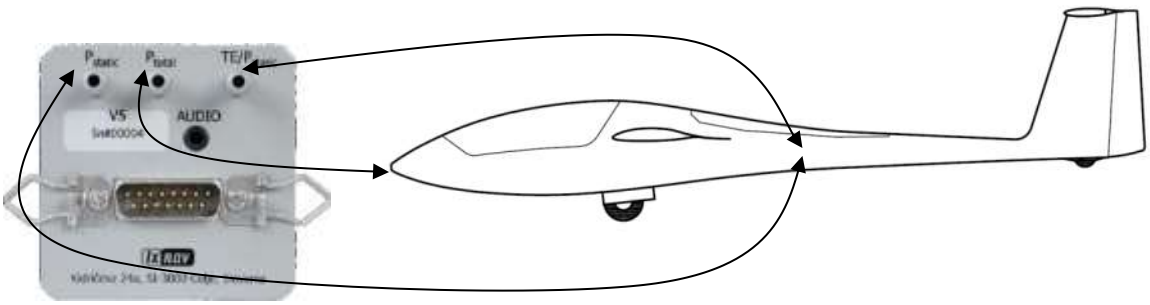

If the unit is to be configured for pneumatic TE compensation using a TE tube, then the connections are:

- TE/P_{static} = TE tube
- P_{static} = Static
- P_{total} = Pitot or Total pressure

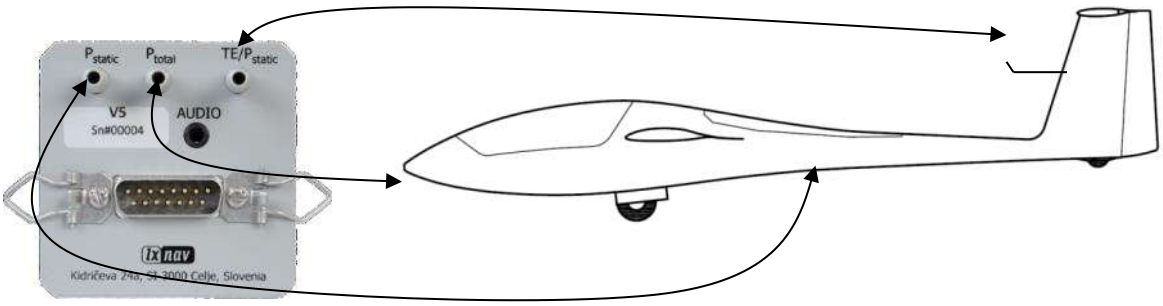

If the P_{total} and Static are connected the wrong way around there will be no vario integrator reading (average climb) during the flight.

The main display unit is connected to 12 Volt power via the 15-pin SUB-D connector. The main display unit, vario unit and other vario indicators are connected via the RS485 bus and the connectors are labelled with "**RS485**" at each end.
Please ensure that both units are connected correctly before the first power on. The power wires (red and blue) should be connected to the main display unit.

It is VERY IMPORTANT to use an external fuse (max. 3A). Power supply cables should use a minimum of 0.5 mm² wires.

5.2.1.4 Audio

The Audio speaker is plugged into the vario unit's Audio port. The Audio port has a standard 3.5mm phono-jack (mono).

If an old vario is being upgraded, the user must exchange the main vario cable otherwise the audio will not work. You ALSO must connect the vario's Audio port directly to a speaker...

Ensure that the LXNAV LX80xx/90xx is not located directly next to audio speaker to avoid ENL sensor problems.

Speaker to be used should have a 4-ohm internal resistance

5.2.1.5 Inputs

V9, V8, V80 and V5 variometers have 6 programmable digital inputs. They are labelled with SC, VP, IN1, IN2, IN3 and IN4 on V5/V9 cable-set. Currently digital input can represent the state of the following actions:

- SC
- Vario priority
- Gear down and lock
- Airbrakes open
- Water ballast open
- Mute vario sound

Digital input shall be wired via a switch to ground and it shall open or close when the selected action is performed. A green light will appear.

If necessary, check the **Invert** check box to reverse the operation of digital input.
Once digital inputs are connected the system will warn the pilot if airbrakes are open on take-off and when the landing gear is not locked down prior to landing.

5.2.2 Installation of Options

All options (Rear Seat Device, Remote Control, Compass Module & secondary vario indicators) are prepared for connection to the RS485 system bus by use of RS485 splitting units. Installation of any option is plug-and-play and therefore requires only mechanical installation work. The main display unit also powers all devices connected to the bus. An automatic fuse built into the main display unit prevents damage to the digital unit should a short circuit in the wiring or in some attached device occur.

5.2.2.1 Remote Sticks

The LXNAV remote stick is connected to the RS485 bus via a RS485 splitter.

Ensure that you correctly connect each coloured wire to the pin which is marked with same colour.

PTT wires are connected to the radio and SC is connected to Speed-to-fly input of the vario unit.

NEW remote sticks (from Autumn 2015) come without a standard SC cable. There is no more need to solder these wires since they are programmable through the LX80/90xx (version 5.0 or higher).

In order to make it work, please check following setting. Go to **Setup->Hardware->Variometer** and make sure that no input is set to "SC on/off switch" or "SC toggle button".

Care is required if you are installing a remote stick into double seater gliders or aircraft. The stick for the rear seat is marked as DS. The DS remote stick is programmed to control the repeater unit which is installed on the 2nd seat.

5.2.2.1.1 2nd Remote Stick (DS)

The 2nd remote stick is used normally to control the 2nd seat unit. The 2nd remote stick has its own RS485 splitter. This remote stick is specially marked (2nd remote stick) on delivery. In case there are two remote sticks in the system it is necessary to connect the RS485 splitter with the main RS485 bus via a special cable (RS485 bridge).

Special Installations of 2nd Remote Sticks

The 2nd remote stick can be installed also as the 2nd remote stick on the front seat (Stemme, Pipistrel). In this case installation is similar, maybe we can share one RS485 splitter and connect both remote sticks to same pins of the splitter. Then we need to activate the 2nd remote stick to be connected to the master (front) unit. This activation is done by checking "**use stick for front seat**" in the **Setup-hardware-remote stick** menu.

5.2.2.1.2 Dimensions

Normal insert

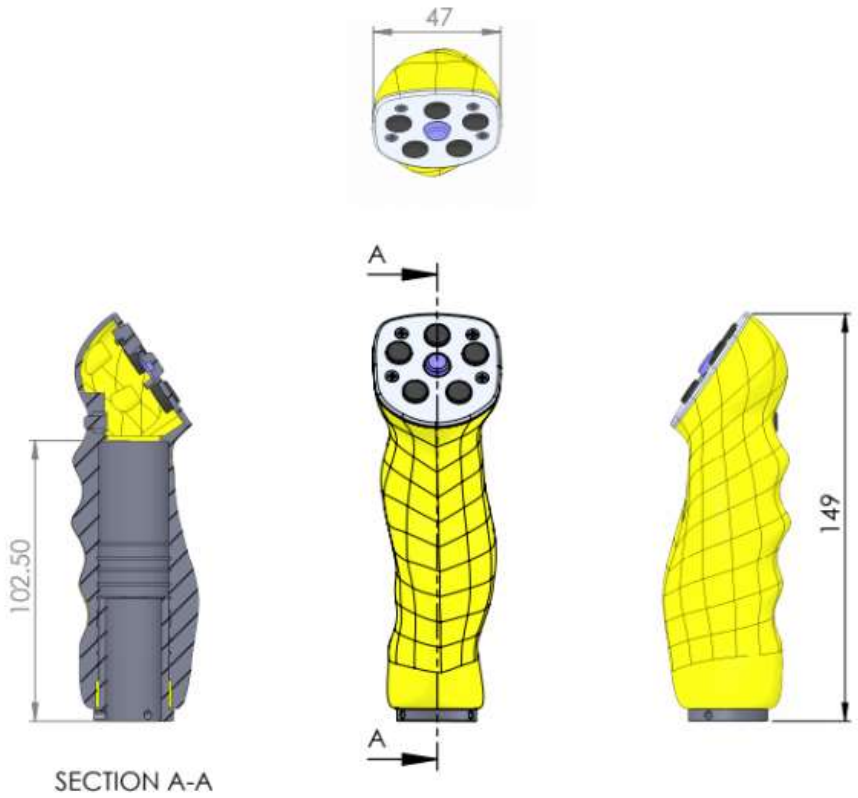

Slanted insert

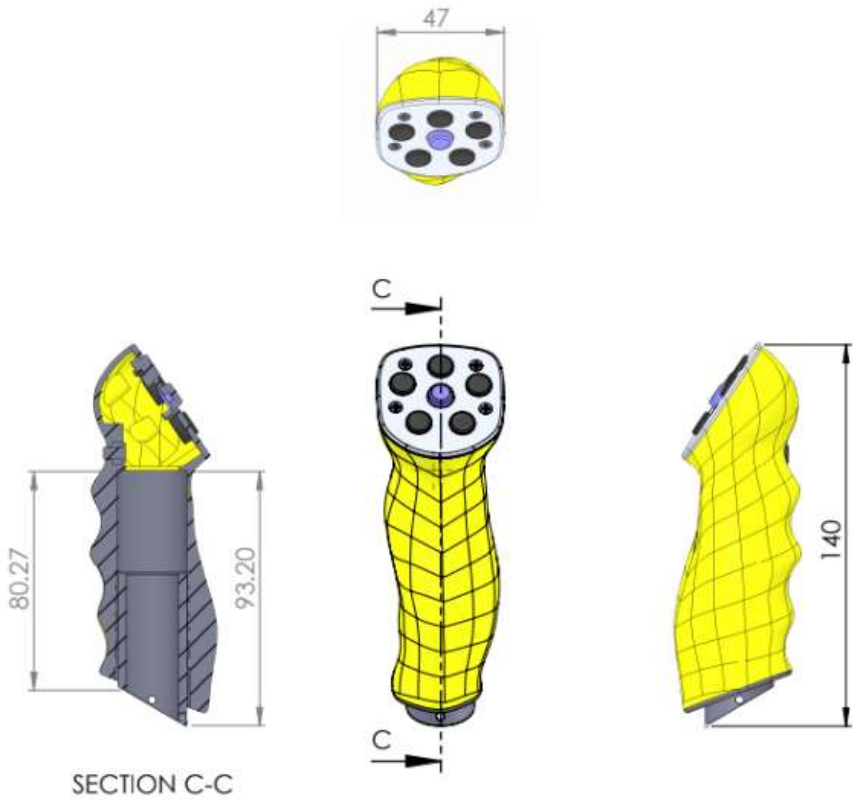

5.2.2.2 Flarm

Usually, Flarm is built inside the main display unit. In this case we need to connect the Flarm antenna to the connector marked "Flarm Antenna" or "Flarm 1" and "Flarm 2", depends whether is integrated Classic or Power Flarm.

The Flarm antenna connector is the SMA type. Normally we supply a T-Dipole antenna with a cable that is approx. 1m long, but there are several other antennas available:

- Short Dipole (90°) lambda/4
- Long dipole (90°) lambda/2
- Flat folded dipole
- Classic dipole
- Antenna with ground plate
- T-Dipole antenna (default option)

For good Flarm reception, the Flarm antenna must be positioned vertically as far as possible away from metal/carbon parts, cables and instruments. On new types of gliders (carbon fuselages) we have experienced poor Flarm reception. This can be avoided by moving the antenna to a more open space. We have very good experience installing the Flarm antenna in the tail of the glider.

For additional information about installation of antennas you may have a look at FLARM's official application note:
https://flarm.com/wp-content/uploads/man/FTD-041-Application-Note-FLARM-Antenna-Installation.pdf

5.2.2.3 External Flarm or Power Flarm (PowerMouse)

If the main display unit has no internal Flarm unit, the user has the possibility to connect an external Flarm or Power Flarm device. All Flarm objects will be displayed on the navigation map with the same functionality as with a built-in Flarm/Power Flarm.

The external Flarm/Power Flarm device can be connected to the main display unit with a **LX5FLARM or LX5PF** cable. On the main display unit side LX5FLARM cable is connected to a 5-pin rounded connector. On the other end of the LX5FLARM cable is a 6-pin standard IGC RJ12 plug connector which is plugged into the Flarm or Flarm splitter (RX/TX line).

Using an improper type of cable may harm your display unit or Flarm/Power Flarm device.

For connection to a Power Flarm a special cable LX5PF is available with a RJ45 connector on the Flarm side.

For connection to FlarmMouse you must buy FlarmSplitter and LX5FLARM-CA cable.

5.2.2.3.1 External Flarm on SIMPLE version

FLARM device should be connected to the GPS port.

You need to set the proper baudrate at **SETUP -> GPS input menu**. After that, you need to check SETUP->FLARM menu. You need to see FLARM's serial number, which means FLARM is communicating with the device. If you would like to send a declaration out, you need to tick **send declaration.**

5.2.2.3.2 External Flarm Display

The external Flarm display can be connected either directly to the Flarm port on the LX80/90xx system (new HW versions of the LX systems) or through the splitter which is connected to the External Flarm device.

Using an improper type of cable may harm your display unit or Flarm/Power Flarm device.

5.2.2.4 ADSB Receiver

5.2.2.4.1 Built in ADSB receiver

Since end of year 2018, LXNAV offers built in LXNAV ADSB receiver, which can be configured by LX, its range is up to 60km (30NM). On the back side is additional SMA connector marked with label ADSB, where can be connected ADSB antenna. Because frequency of the Flarm is not so far from ADSB frequency, you can use also Flarm antenna connected to ADSB connector.

5.2.2.4.2 TRX1090

It is possible to connect an ADSB-receiver TRX-1090 from Garrecht Avionics (www.garrecht.com) to a system with a built-in Flarm unit.

The TRX-1090 can only be connected to a system with the integrated Flarm option.

The TRX-1090 has been developed to upgrade the FLARM collision avoidance system which is installed in more than 13,000 aircraft worldwide. The unit is connected between the FLARM device and a FLARM compatible external display unit and will simultaneously show FLARM targets and Mode-S transponder equipped aircraft with ADS-B output capability. The presence of transponder-equipped aircraft not broadcasting ADS-B output will be detected and displayed on the connected display as a non-directional target. The TRX-1090 comes with a high-sensitivity low-distortion receiver unit and a highly complex and powerful signal processing unit with multi-level error correction algorithms to provide data with a very high accuracy.

5.2.2.4.2.1 TRX Tool

Using the TRX-Tool program you should configure the TRX-1090 to be used together with the system. The TRX-Tool can be downloaded (http://www.garrecht.com) under the Support/Downloads/Software section. Run the TRX-Tool program and connect the TRX-1090 to PC using a USB cable. Select the **Port4** tab and change **connected equipment** to **LX8000** (or FLARM if no RX line connected).

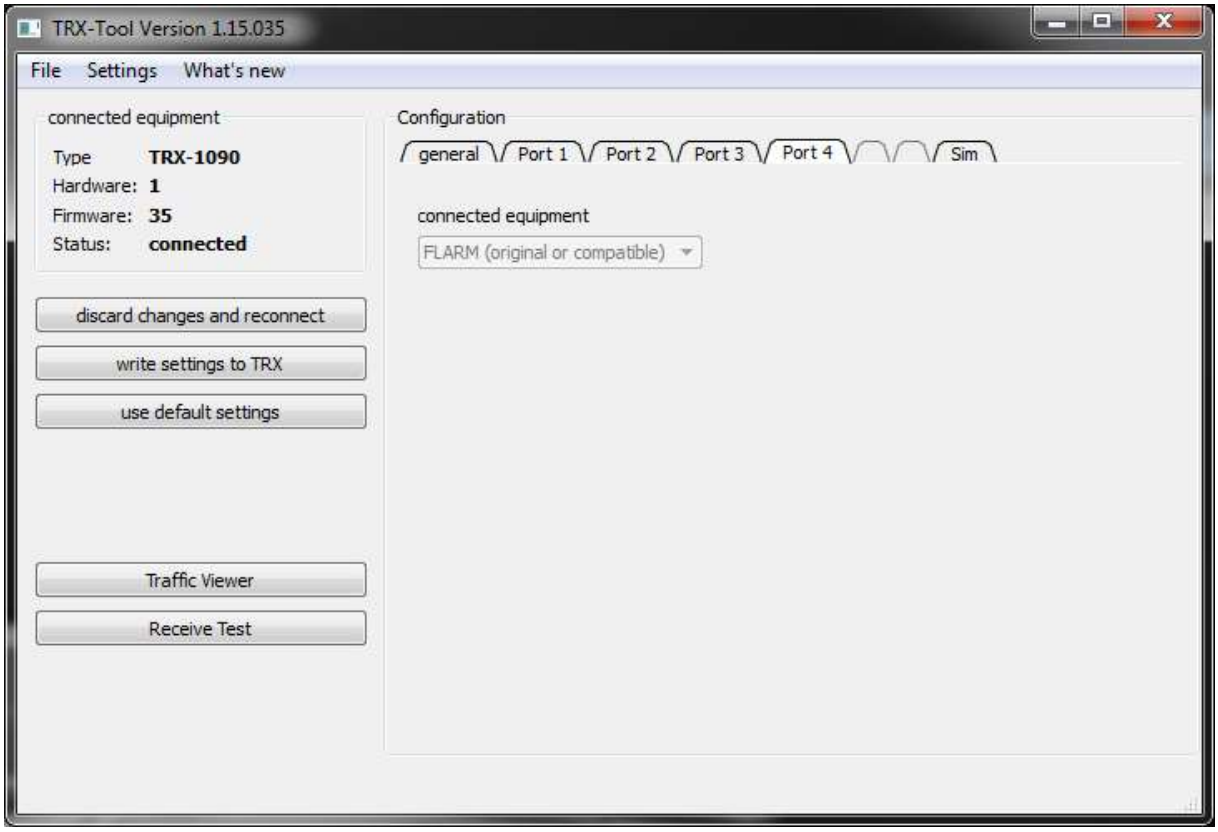

Select the **Port2** tab and change **Baudrate** to **19200bps**.

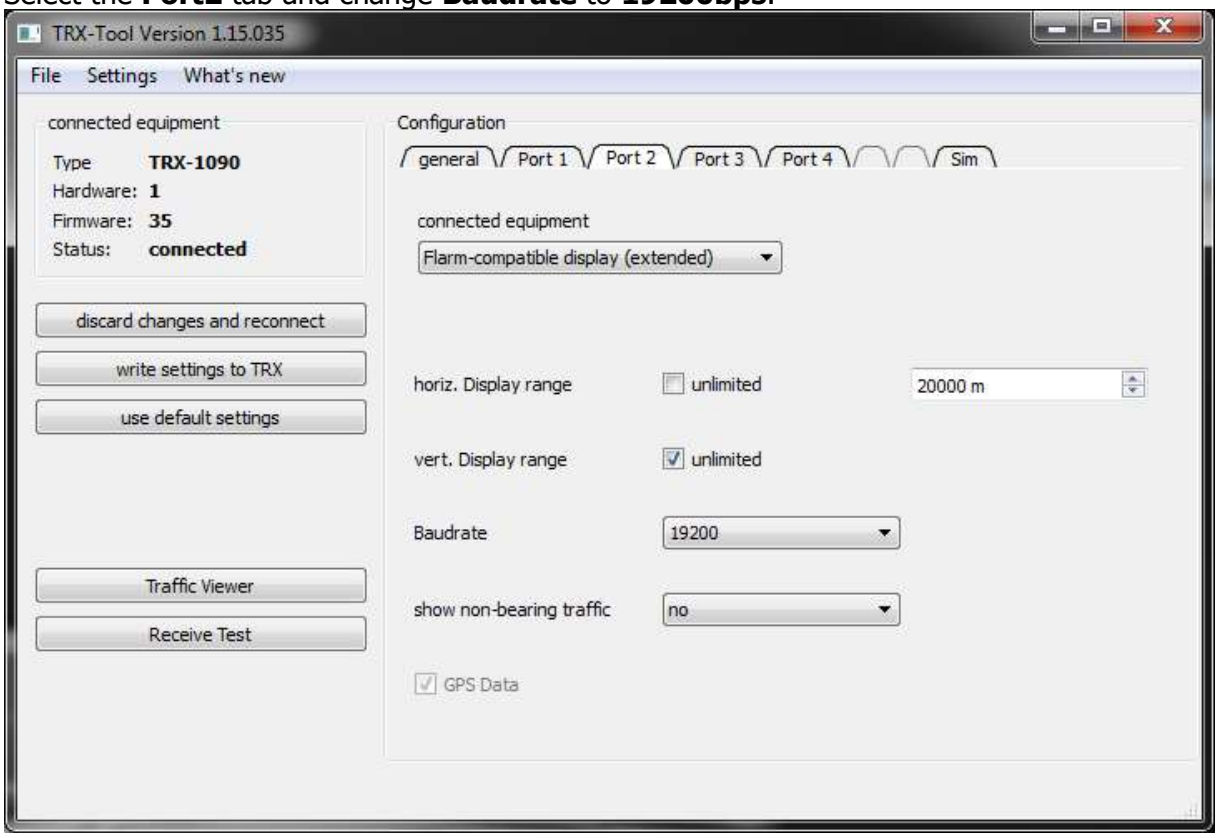

The LX90xx system and TRX-1090 are now ready for operation. On the info page you should see the TX sign and the number of received objects.

5.2.2.4.2.2 Connecting the TRX-1090 to the System

Disconnect the cable from the Flarm external display and connect the free cable to Port4 on the TRX-1090. Use the LX9000-TRX cable (not-included, must be ordered separately) and connect it between Port2 and the PC port on the main display unit.

On the main display unit go to the **setup** menu and choose the **Hardware->Flarm** menu item. Change **mode** to **Ext. (PC)**.

Port on LX9000		Cable		Port on TRX 1090
LX9000 FLARM	->	via cable (Flarm-TRX1090)	->	TRX Port4 (Flarm original or compatible)
LX9000PC (5pin rounded connector)	<-	via cable (TRX LX9000)	<-	TRX Port2 (Flarm Compatible display, set to 19200)

5.2.2.5 NANO/NANO3

All devices from the NANO family can be connected to a LXxxxx system. The biggest advantage of connecting them is to declare tasks from LXxxxx to NANO. If main unit has PDA port, NANO can be connected directly to it. Otherwise use circular connector on DU cable set.

5.2.2.5.1 Over 5-pin Binder connector

Use 5 pin circular connector from DU cable set for communication with NANO logger. Necessary cables and adapters are: LX5FL, CC-NP-LX, mini USB to USB-A cable, FlarmSplitter and NanoPower. On FlarmSpliter use only *RX/TX* ports for bidirectional communication.

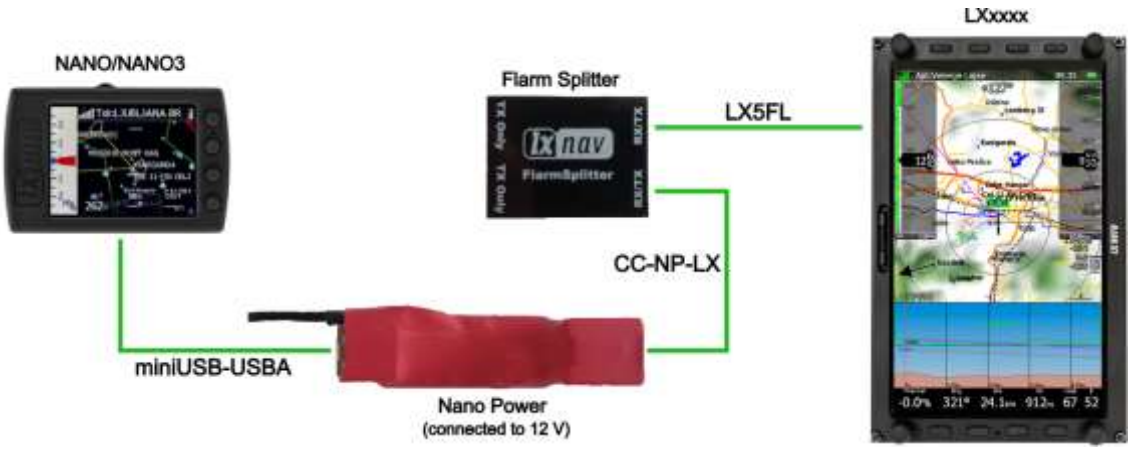

5.2.2.5.2 Over PDA port on main unit

NANO or NANO3 can be connected to main unit directly via PDA port when this port is available. Dedicated cable is CC-NP-OUDIE.

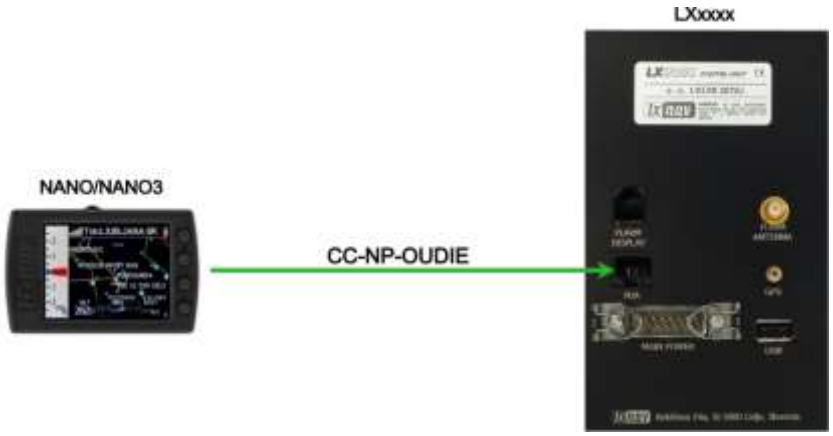

Declaration is done automatically after editing task or after pressing the button SEND in Task mode.

It is very important, that you have selected right port on LXxxxx (PDA or PC) and baudrate, which must be set same as is on NANO/NANO3. On NANO/NANO3 side, you must enable external port and enable NMEA data.

5.2.2.6 NANO4

Connectivity is the same as for NANO/NANO3 with one exception, NANO4 uses micro-USB cable instead of mini USB.

5.2.2.6.1 Over 5-pin Binder connector

Use 5 pin circular connector from DU cable set for communication with NANO logger. Necessary cables and adapters are: LX5FL, CC-NP-LX, micro-USB to USB-A cable, FlarmSplitter and NanoPower. On FlarmSpliter use only *RX/TX* ports for bidirectional communication.

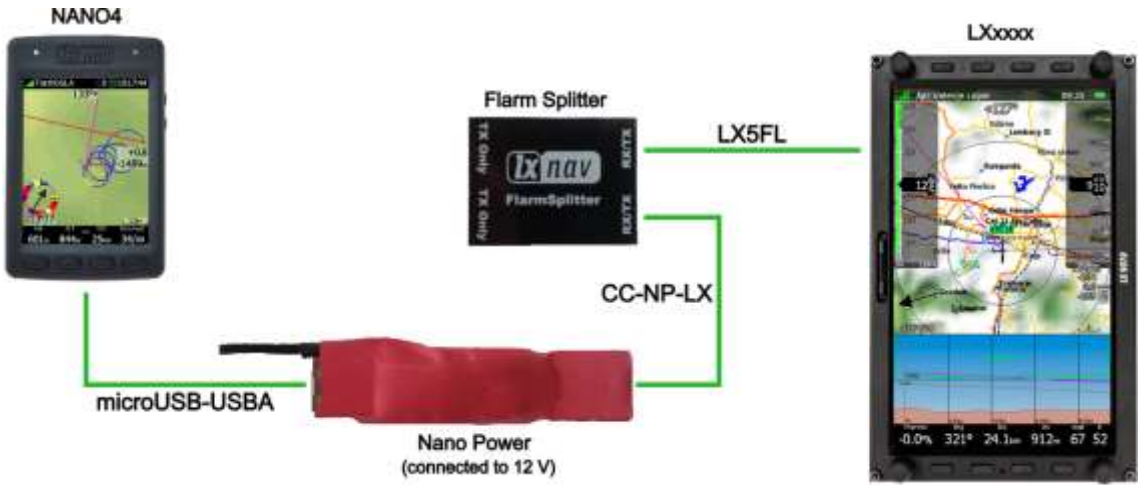

5.2.2.6.2 Over LX5PDA

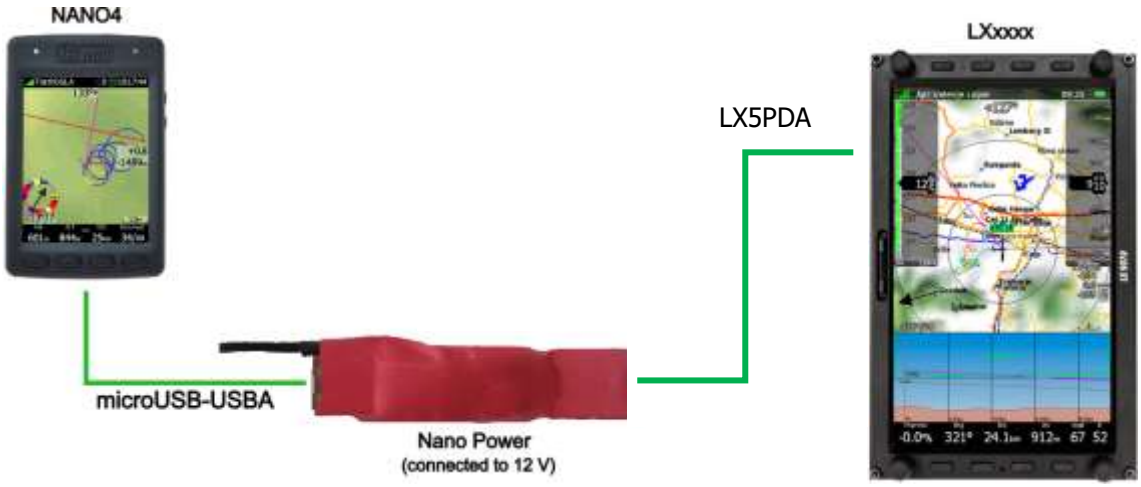

5.2.2.6.3 Over PDA port on main unit

NANO4 can be connected to main unit directly via PDA port when this port is available. Dedicated cable is CC-NP-NANO4.

Declaration is done automatically after editing task or after pressing the button SEND in Task mode.

It is very important, that you have selected right port on LXxxxx (PDA or PC) and baudrate, which must be set same as is on NANO4. On NANO4 side, you must enable external port and enable NMEA data.

5.2.2.7 Sxx vario connection to LXxxxx

All LXNAV standalone varios with PDA port can be connected to a LXxxxx system. The biggest advantage of connecting them is to declare tasks from LXxxxx to standalone vario. Cables and adapters needed: LX5FL, CC-NP-LX and FlarmSplitter. On FlarmSpliter use only *RX/TX* ports for bidirectional communication.

Option 1: From Sxx **PDA** to LXxxxx on **5pin** connector

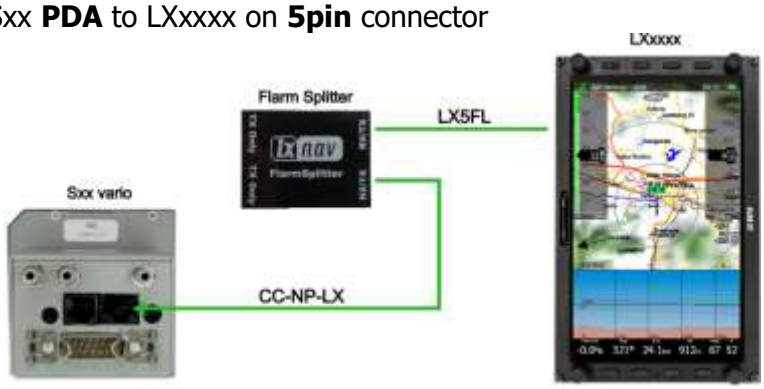

Option 2: From Sxx **GPS** to LXxxxx on **5pin** connector

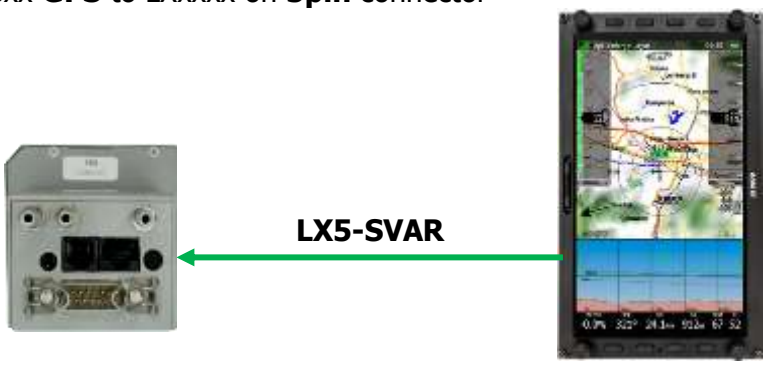

Option 3: From Sxx **PDA** to LXxxxx on **5pin** connector

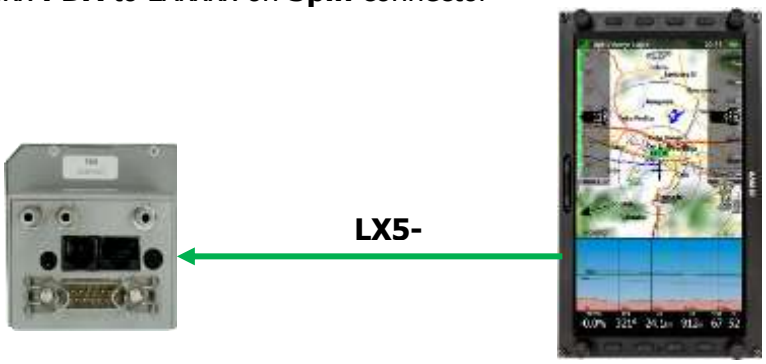

Declaration is done automatically after editing task or after pressing the button SEND in Task mode.

To enable sending MC/BAL/BUGS from LXxxxx you need to enable LXWP2 sentence. Receiving MC/BAL/BUGS from S-vario is in the moment not supported.

In case external Flarm is connected to S-vario, task can be forwarded also to Flarm (with IGC option).

It is very important, that you have selected right port on LXxxxx (PDA or PC) and baudrate, which must be set same as is on NANO/NANO3. On NANO/NANO3 side, you must enable external port and enable NMEA data.

5.2.2.8 Additional Indicators

Indicators are connected to the RS485 bus via supplied RS3485 cables and additional RS485 splitters.

5.2.2.9 Flap Sensor

The flap sensor also communicates with the main system via the RS485 bus. Installation of the flap sensor may be complicated for some gliders. Please contact the glider manufacturer for more details.

5.2.2.10 LX DAQ

The DAQ D-Sub 9 connector connects to the LX80xx/90xx via its 485 system bus. External sensors are connected via 10pin terminal block connector located on opposite side from D-Sub 9 connector. For more information refer to LX DAQ installation manual.

5.2.2.11 485 to 232 Bridge

The LXNAV RS485 to RS232 Bridge (Bridge) is connected to the RS485 bus via a RS485 splitter DB9 connector. The RS485 splitter is not part of the package. If you do not have a spare port on the RS485 splitter you must order it including the radio bridge cable.

5.2.2.11.1 Installation of 485 to 232 Bridge

The RS485 splitter requires a small modification before the Bridge can be fitted. It is necessary to remove two HEX screws where Bridge will be connected and replace by two spring locks that are in the package.

Then fixing the Bridge to RS485 splitter will be very easy.

On the other side of the Bridge is a RJ12 connector with standard IGC/FLARM pinout.

Pin Number	Description
1	(output) 12V DC, to supply GPS
2	3.3V DC (max 100mA)
3	GND
4	Flarm Data Out
5	Flarm Data In
6	Ground

By default, the Bridge is programmed to stream NMEA data at 4800bps. It streams standard GPS and Flarm data. 485 to 232 bridges can be configured as NMEA Bridge, Radio Bridge or Transponder Bridge.

5.2.2.11.2 NMEA Bridge

The NMEA Bridge has been designed to expand a number of NMEA ports in the system. It can be used as classic NMEA output for PDA device to feed a Mode-S transponder with NMEA.

5.2.2.11.3 Radio Bridge (UPDATED)

The Radio Bridge is the same part of hardware as the NMEA Bridge. On the main unit it can be configured as a Radio Bridge which can communicate with supported radios (for more information please refer to the Radio/Transponder Bridge manual).

5.2.2.11.4 Transponder Bridge (UPDATED)

The Transponder Bridge is the same part of hardware as the NMEA Bridge. On the main unit it can be configured as a Transponder Bridge which can communicate with the supported Transponders (for more information please refer to the Radio/Transponder Bridge manual).

5.2.2.12 Wi-Fi Module

The Wi-Fi dongle must be plugged into a USB port. The Wi-Fi dongle will be operational when the unit which has enabled that option and the wireless network are available.

In LX8030 and LX8040 devices Wi-Fi module is already integrated. Only Wi-Fi antenna should be plugged in to the back of the device (to the Wi-Fi antenna port).

5.2.2.13 Compass Module

The compass module must be connected to the RS485 bus. It must be installed at a location where there are no strong magnetic fields (iron or ferromagnetic materials) or cables with AC current or fluctuating DC currents.

When installing the magnetic compass use screws made of non-ferromagnetic materials (plastic or brass).

Orientation of the compass module marked on the housing as shown on picture above.

5.2.2.14 AHRS (Attitude and Heading Reference System)

AHRS hardware is built in each V9/V8/V80 unit. To see the artificial horizon on the screen it is necessary to activate that option.

It is recommended to install the vario as horizontally as possible. Small corrections can be adjusted with pitch correction.

5.2.2.15 FES Bridge

The FES Bridge is a device which connects together a FCU CAN bus and a system RS485 bus. On FES side, FES bridge must be connected to CAN bus as described on schematic below. This cable is not supplied with FES bridge, it must be soldered directly to FCU.
On RS485 side is a spring connector which can be wired to DB9 (RS485) as on schematic below, connected to RS485 splitter, or simply connect four wires parallel to remote stick spring connector on RS485 splitter.
Indication gauges can be created with the LXStyler or LAYOUT function. Just connect correct the coloured wire to the appropriate pin. On the other side it should be connected to the CAN bus (DB9) of the FCU. On this side 3 wires are needed to be soldered to the right pins.

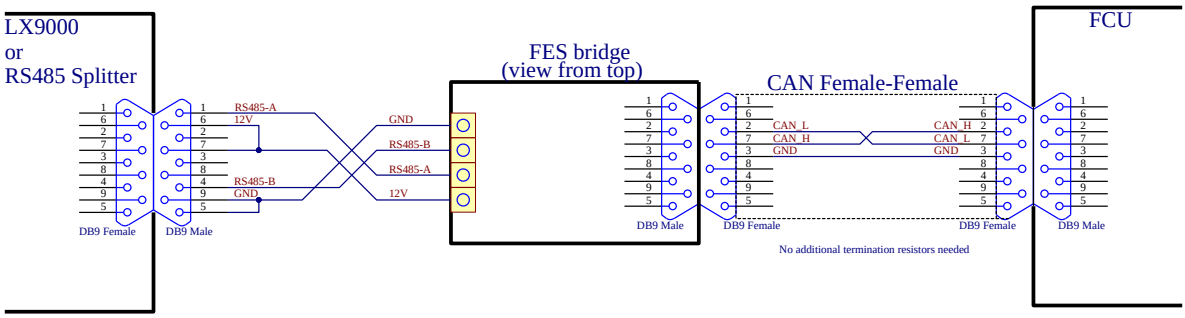

5.2.2.16 JDU Bridge

The JDU Bridge is a device which connects together a JDU CAN bus and a system RS485 bus. On JDU side, JDU bridge must be connected to CAN bus as described on schematic below. This cable is not supplied with JDU bridge, it must be soldered directly to FCU.
On RS485 side is a spring connector which can be wired to DB9 (RS485) as on schematic below, connected to RS485 splitter, or simply connect four wires parallel to remote stick spring connector on RS485 splitter.

Indication gauges can be created with the LXStyler or LAYOUT function. On the RS485 side the easiest way is to connect to a RS485 splitter with Remote Stick pins (parallel). Just connect the correct colour to the correct pin. On the other side it should be connected to the CAN bus (DB9) of the FCU. On this side 3 wires are needed to be soldered to the correct pins.

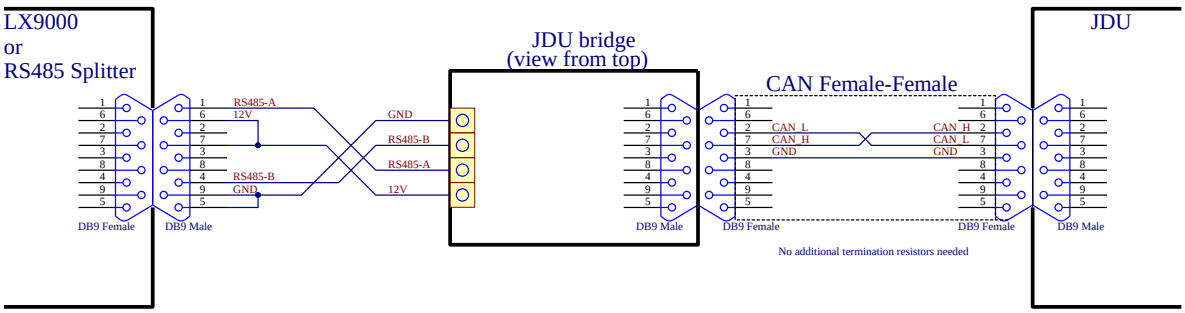

5.2.2.17 FlarmLED Display

The FlarmLED display is used to display Flarm warnings. It must be installed at a visible location so that pilot can immediately see collision warnings. The Flarm LED is connected via a standard Flarm cable with RJ12 (6 pin connectors). Power is supplied over the 3V pin.

5.2.2.17.1 FlarmLED Pinout

Pin Number	Description
1	N.C.
2	(output) Transmit from LXNAV FLARM LED RS232 Level
3	(input) Receive to LXNAV FLARM LED RS232 Level
4	Ground
5	3.3V power supply (input)
6	N.C.

5.2.2.17.2 Cut-Out

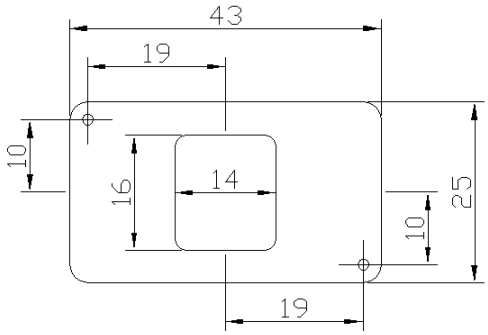

Front view
Drawing is not to scale

5.2.2.18 FlarmView and FlarmView2 Display

FlarmView has a display similar to FlarmLED; it has a graphics display and provides the pilot with additional information such as the Flarm radar screen and information about all visible targets. It must be installed at a visible place so that the pilot can see collision warnings immediately. FlarmView is connected via a standard Flarm cable with RJ12 (6 pin) connectors. Power is supplied over the 12V pin.

5.2.2.18.1 Pinout

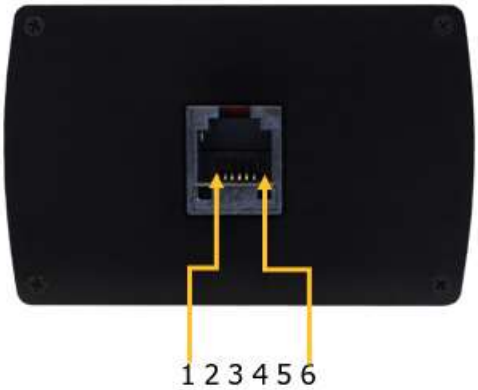

Pin numbers

Pin Number	Description
1	(Power input) 12VDC (On version 2)
2	(Power input) 3.3VDC (On version 1)
3	GND
4	(input) Data in RS232 – receive line
5	(output) Data out RS232 – transmit line
6	Ground

5.2.2.18.2 Cut-Out

The LXNAV FlarmView cut-out is very simple. A square hole with dimensions 14mm x 15mm is required.

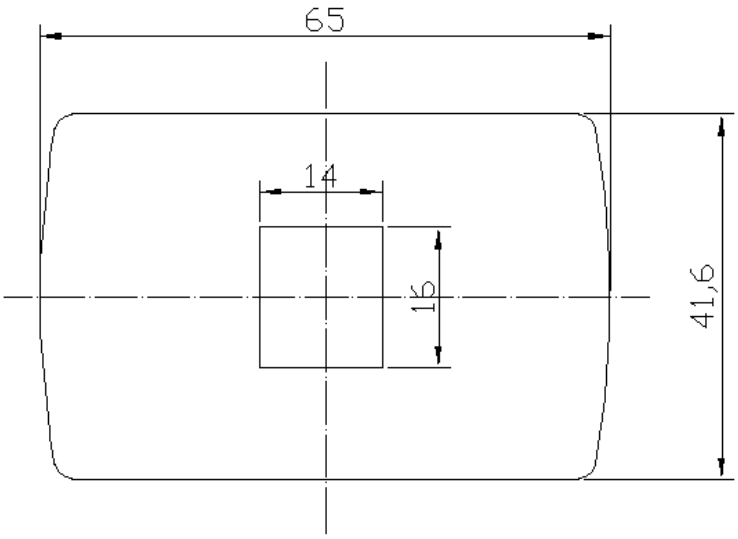

Drawing is not to scale

5.2.2.19 FlarmView57 Display

FlarmView57 is the same display as FlarmView, only with a different housing. FlarmView57 is connected via standard Flarm cable with RJ12 (6 pin) connectors. Power is supplied over the 12V pin.

5.2.2.19.1 Cut-Out

The FlarmView57 is installed in one standard 57mm cut-out. If there is none available, prepare it according to the picture below.

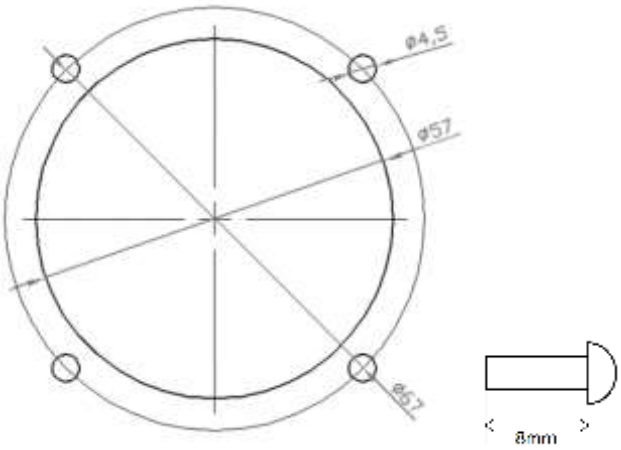

Drawing is not to scale.

5.2.2.19.2 FlarmView 57 Pinout

Pin Number	Description
1	(Power input) 12VDC (On version 2)
2	(Power input) 3.3VDC (On version 1)
3	GND
4	(input) Data in RS232 – receive line
5	(output) Data out RS232 – transmit line
6	Ground

5.2.2.20 Flarm ACL

FlarmACL is a box which can switch an Anti-Collision light on or off. This switching can be automatic or manual.

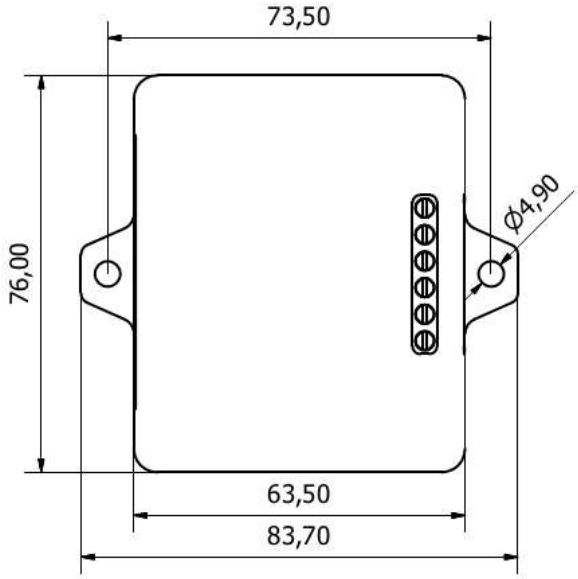

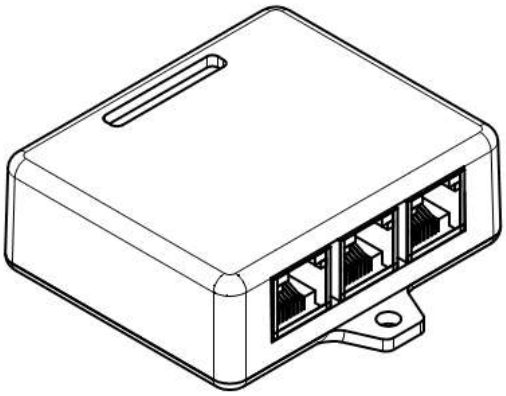

All dimensions in mm

5.2.2.20.1 Wiring

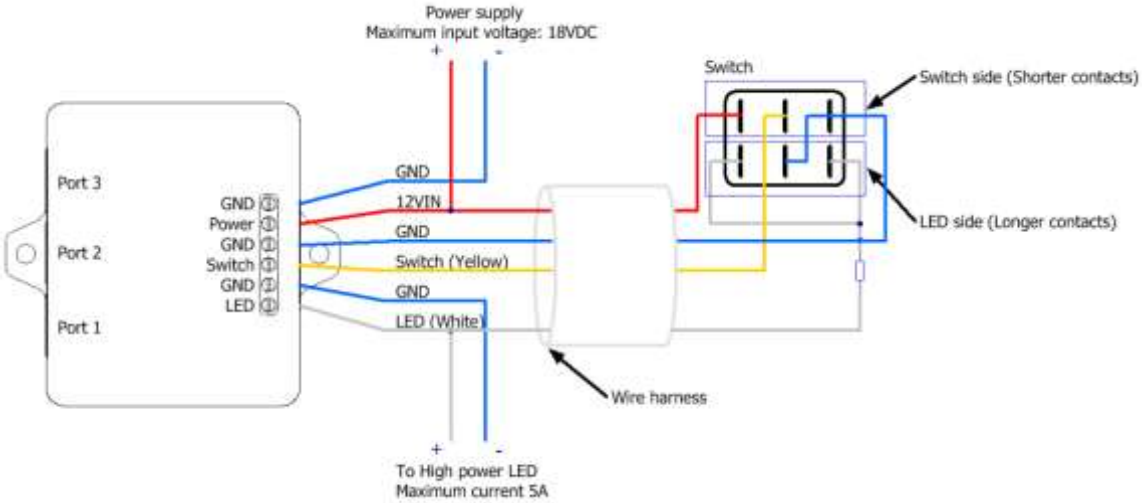

5.2.2.20.2 LXxxxx-TRX1090-FlarmACL-FlarmLED

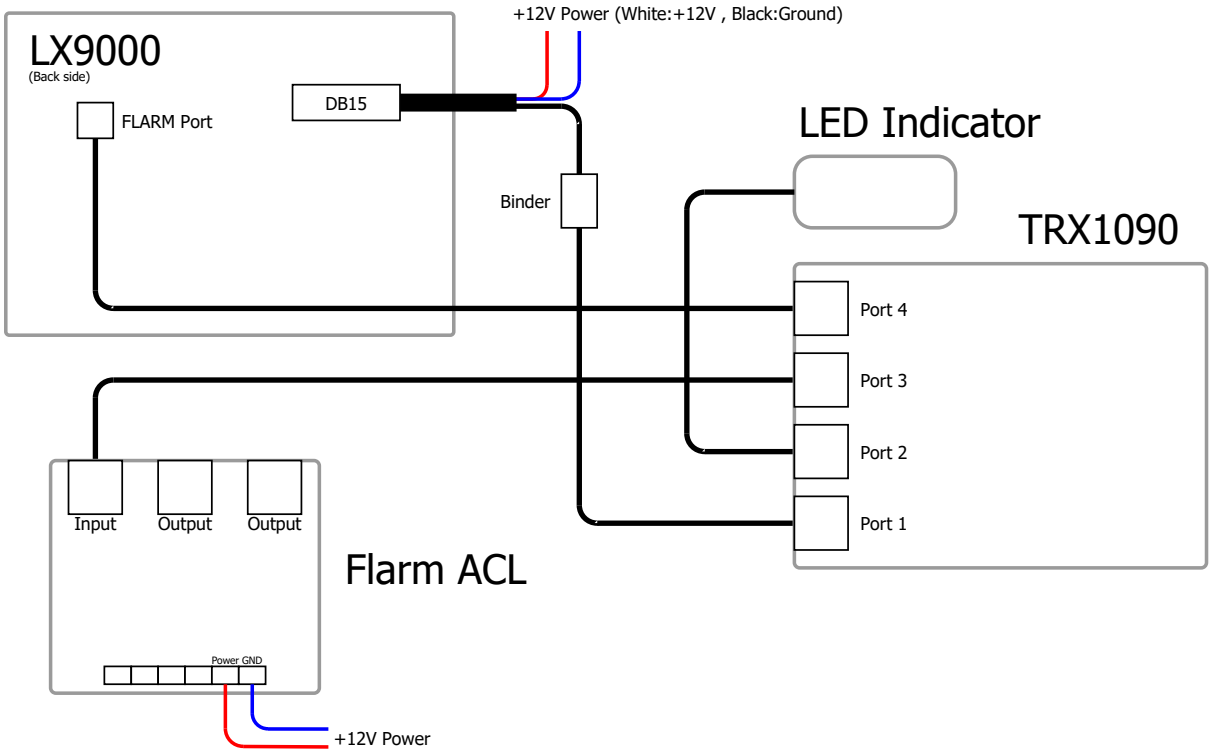

5.2.2.20.3 LXxxxx-LXxxxxDs-PowerFlarm-FlarmACL-FlarmLED

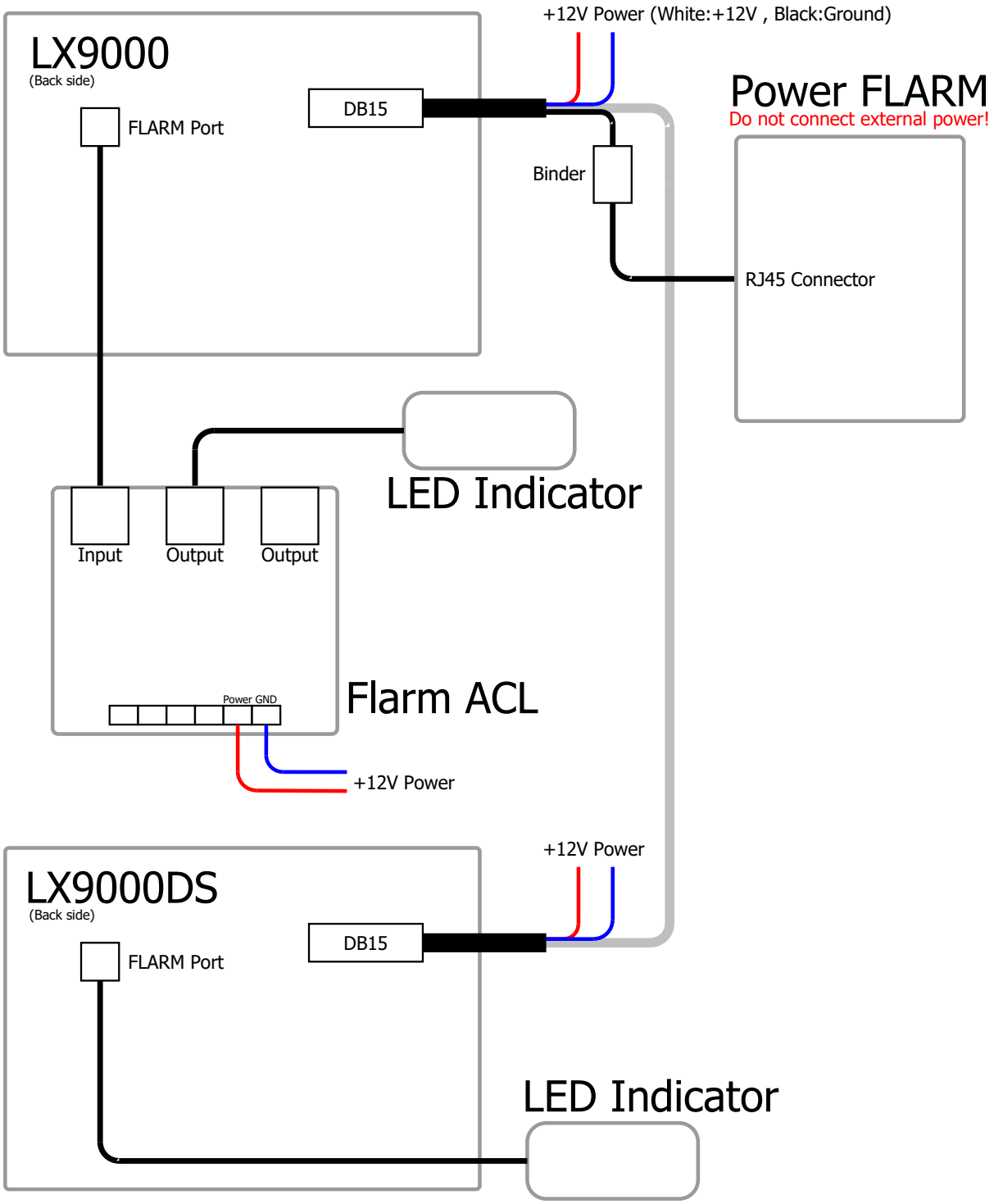

5.2.2.20.4 LXxxxx-PowerFlarm-FlarmACL-FlarmLED

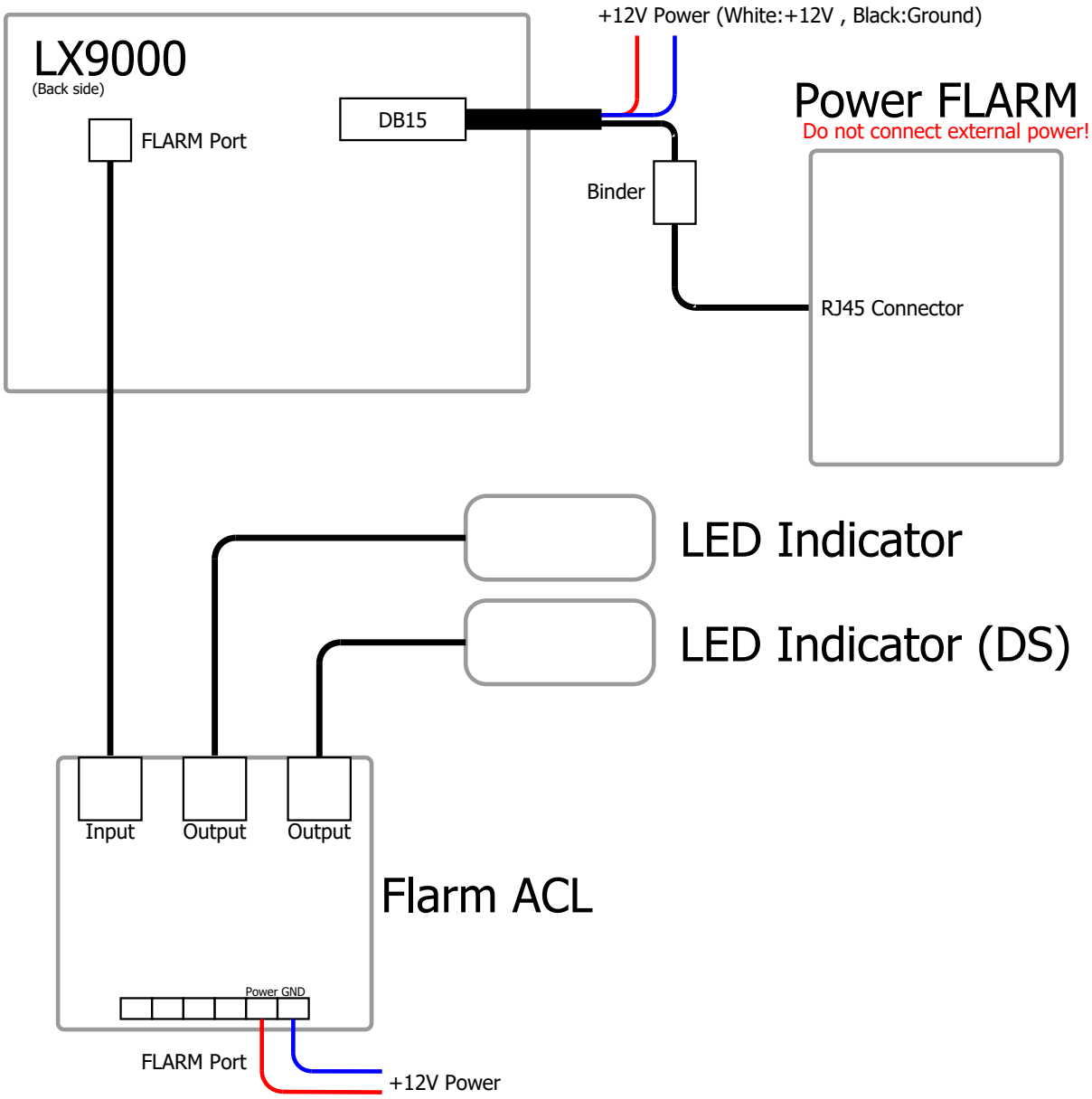

12V power lines can be also white and black cables instead of red and blue. White is positive + 12V DC and black is GND.

5.2.2.20.5 Ports and Pinouts

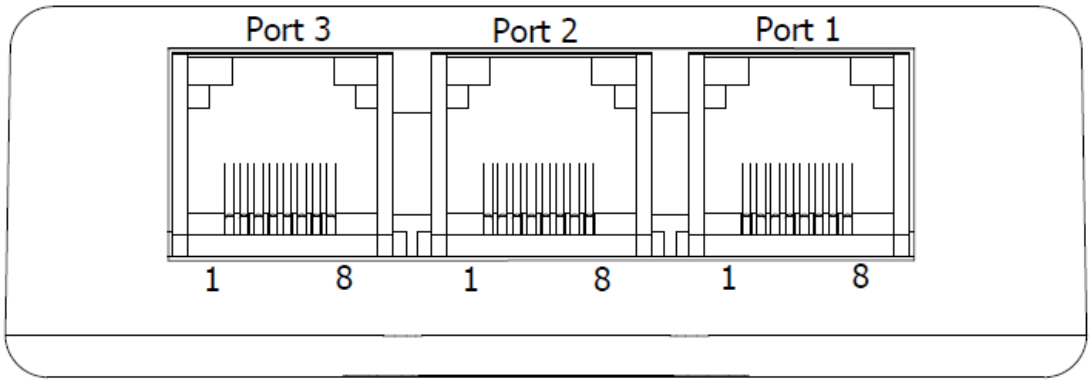

FlarmACL connects together Pin 1 from Port 1-3, Pin 2 from Port 1-3, etc. Pin names are:

1- +12V
2- +12V
3- +3,3V (Flarm displays)
4- GND
5- Data Input (Output)
6- Data Output (Input)
7- GND
8- GND

5.2.2.21 Bluetooth Module

The LXNAV Bluetooth module is a special device which can be used only in combination with a LXNAV PDA port (RJ45). Connecting to other similar ports will damage the unit. After connecting the module the baud rate must be set manually.

5.2.3 LXNAV Connect set-up

LXNAV Connect is a feature that allows you to overview and manage all your data and flight upload services. Once you have internet access you can check the status of each individual service.
To use LXNAV Connect you must have purchased the Wi-Fi option (in the case of LX8030 and LX8040 it is already included). For more information about what options LXNAV Connect offers please see LX80xx/90xx user manual.

All the LXNAV Connect features require connection to Wi-Fi network. To connect to Wi-Fi networks, you first must connect Wi-Fi module to your device as described in chapter 5.2.2.11.

5.2.3.1 Activating Wi-Fi module

If you purchased your device with Wi-Fi option already enabled, then this step is already completed when you receive device. If you bought Wi-Fi option later, you will receive update firmware and update code via email. There you will also find an update manual. Please follow that manual to activate your Wi-Fi option.

5.2.3.2 Creating account

To start using all the different services please visit https://connect.lxnav.com/account/sign-in on your preferred web browser. First you must sign up with LXNAV Cloud account, or login with Google, Dropbox, or SeeYou account. You can also recover your lost password by clicking "I forgot my password". Account settings can be managed in the top right corner.

5.2.3.3 Pair profile to the device

Last step is pairing your LXNAV Connect profile to your device. To do so please follow instructions in the LX80xx/90xx user manual. All of the services and features that are supported by LXNAV Connect and how to use them is described there in detail.

6 Firmware Update

Once the instruments have been installed (or an upgrade performed) the firmware of the various devices should be updated. Refer to the instructions in the User's manual for the LX90xx/80xx.

7 Troubleshooting

7.1 Export Diagnostic Files

A Diagnostic file can be downloaded from the main unit under **Setup-About**. If a SD card is in the SD socket (or SD card holder in case of LX8030/8040) the user can copy the diagnostic file to the SD card. If a Wi-Fi module is plugged in and wireless network is available, the user can send this file via email directly to LXNAV.

8 Revision History

Rev	Date	Comments
1	June 2015	Initial release of installation manual.
2	January 2016	Updated Radio/Transponder Bridge, added 3d device dimensions, minor graphical changes.
3	May 2016	Corrections to English language text, added I5, I8, I80 dimensions, radio/transponder bridge connections were removed from the manual.
4	August 2016	Moved wiring chapter 5.2.1.1.1.
5	September 2016	Added wiring chapter 5.2.2.16.2 , 5.2.2.16.3, 5.2.2.16.4.
6	November 2016	Updated chapter 6, Added Colibri port
7	June 2017	Corrections to English language text.
8	June 2018	Minor corrections
9	October 2018	Updated chapter 5.2.1.4, Added 5.2.2.5, 5.2.2.7
10	October 2018	Updated chapters 5.2.2.5, 5.2.2.7, Added 5.2.2.6
11	February 2019	New chapter 5.2.2.1.2
12	April 2019	Updated chapter: 5.2.2.7
13	July 2019	Added chapter: 5.2.2.3.1, 5.2.2.3.2 Updated chapter: 5.1.2.2
14	August 2019	Updated chapter: 5.2.2.7
15	September 2019	Updated chapter: 3.2
16	December 2019	New chapter:5.2.2.4.1
19	August 2020	Updated chapter 5.1.4.4
20	December 2020	Updated chapters 5.2.2.5,5.2.2.6,5.2.2.7
21	February 2021	Updated chapter 5.1.2.2, Style update
22	March 2021	LX8030 and LX8040 added to the manual
23	April 2021	Added chapters 5.1.3.2,5.1.3.4
24	May 2021	Added chapters 5.1.2.8, 5.2.3
25	July 2021	Updated image in chapter 4.7
26	July 2021	Added chapter 5.2.2.6.2
27	September 2021	Updated chapter 5.2.2.2
28	March 2022	Description for GPS, FLARM and Wi-Fi connectors
29	October 2022	Updated chapter 4.7
30	December 2022	Added chapters 5.1.3.2, 5.1.3.4, 5.2.2.10, Updated chapters 3.1, 3.2, 3.3, 4.7
31	January 2023	Added chapter 5.2.1.1.2
32	March 2023	Addec chapter 5.1.4.11

The pilot's choice

LXNAV d.o.o.
Kidričeva 24, SI-3000 Celje, Slovenia
T: +386 592 334 00 I F:+386 599 335 22 I info@lxnav.com
www.lxnav.com